Chandindu River Salmon Enumeration Weir

CRE-13-03

Draft Final

Prepared By:

Ron McCready

Chandindu River Salmon Enumeration Weir

CRE-13-03

Draft Final

September 2003

Prepared By:

Ron McCready

Prepared for:

The Yukon River Commercial Fishing Association

Tr'ondek Hwech'in

The Yukon River Panel

ACKNOWLEDGEMENTS

Thanks go to Jake Duncan, Dawson Area Salmon Steward, for assistance with this project. Technical materials and data analysis was provided by Pat Milligan of DFO. Project coordination was done by Ron McCready with the assistance of Jay Farr and David Netro as weir attendants. Our skills exchange program was successful with the cooperation from USF&WS. A site assessment was completed by Kevin Van Hatten & Bill Carter of USF&WS & Pat Milligan of DFO. Mel Belshara participated in the skills exchange program and assisted with the spring move and initial setup. Funding for this project was provided by the Yukon River Panel.

TABLE OF CONTENTS

ACKNOWLEDGEMENTS i

1.0 ABSTRACT 1

2.0 INTRODUCTION 2

3.0 METHODS, MATERIALS, RESULTS AND DISCUSSION 4

4.0 RECOMMENDATIONS 7

5.0 REFERENCES 8

6.0 LIST OF TABLES AND FIGURES 9

7.0 LIST OF PHOTOS 10

APPENDICIES 20

1.0 ABSTRACT

As part of an area-wide chinook salmon restoration program based on an egg incubation and fry out-planting strategy, the Chandindu River enumeration weir has operated to assess recent salmon escapement levels and the potential availability of brood stock. In previous years of operation, a traditional rigid-type, steel tripod and conduit weir was employed. Due to difficulties with high water and flooding of the traditional weir, a resistance board weir was constructed in 2002 and relocated to a more suitable site in 2003. Resistance board weirs are gaining in popularity as this relatively new technology can accommodate high water levels and heavy debris loads. In 2003, an exchange program was initiated, whereby field workers associated with the project from Canada went to Alaska and participated in resistance board weir installations, and technicians from the USF&WS came to the Chandindu River to assist in weir installation. Installation and operation of a resistance board weir on the Chandindu River remains problematic due to the high discharges that occur on this river. In an effort to maintain a constant count of migrating chinook salmon, workers had to replace the resistance board weir with the original rigid weir configuration. Data was collected, however, it was limited to periods when the weir was effectively enumerating chinook salmon. All information was forwarded to DFO in-season.

2.0 INTRODUCTION

2.1 General Introduction

The Chandindu River is located approximately 20km downstream of the city of Dawson, YT on the Yukon River. Its watershed drains approximately 1,710 km^2. Its headwaters and much of its left bank are now, as a result of the Tr'ondek Hwech'in Final Land Claim Agreement, encompassed by a park named "Tombstone Territorial Park".

At one time, there was both an aboriginal and a commercial fishery at the mouth of the Chandindu River. Many people camped and fished at its confluence with the Yukon River. Fish were also captured in the Chandindu River by net, and as one Tr'ondek Hwech'in Elder has described it (Cox et al. 1997), they used to "stretch a net across its banks and fish until it was full" Takkudh Gwitch'in people used to travel the area and saw chinook salmon ascending the Chandindu River above the canyon at the Wolverine Creek confluence. These sighting were confirmed by Forestry firefighters working in the area and, more recently, by aerial surveys (Duncan 1998). The Chandindu River has spawning populations of both chinook and chum salmon (Duncan 1999).

The Chandindu River has been identified as being a candidate stream for salmon restoration through an egg incubation/fry out-planting strategy (Duncan 1999). To this end, an enumeration weir was operated from 1998-2001. It has been determined that brood stock is available to support a chinook salmon restoration program (Duncan 1999).

The enumeration weir employed on the Chandindu River during the 1998-2001 period was a rigid-type weir made from steel tripods, stringers and steel conduit. Fisheries and Oceans Canada (DFO) uses this weir design throughout northern British Columbia and the Yukon Territory. This weir design, used on the Chandindu River has, on a number of occasions, encountered difficulties

resulting from high stream flows, heavy debris loading, and flooding conditions. After consultations with personnel at the U.S. Fish and Wildlife Service (USF&WS), it was thought that a resistance-board weir would be able to address these challenges, as this weir type is designed to be flood-resistant.

2.2 Resistance Board Weirs

Resistance-board weirs are relatively new and are quickly becoming a popular solution as a management tool for research that involves enumerating and sampling migrating salmon in rivers (Tobin 1994). This weir type is particularly suited to rivers with high discharges and high flooding probability, such as our northern rivers where permafrost is present and lake-storage of water, to buffer flooding conditions, is not present. These weirs are designed to be flood resistant and excel in conditions of high debris loads. The resistance board weir is also relatively portable and can be completely removed to accommodate winter ice-cover periods. Although not completely resistant to washouts, this type of weir is a great technical improvement on the rigid weir designs in harsh conditions.

Resistance board weirs are attached to the streambed on a rail and cable system that is staked across the streambed. Once fastened to the cable and rail system, the weir panels are allowed to float downstream with the aid of a resistance board. The resistance board is fastened across the weir panels and angled perpendicular to the river current. This board acts similar to wing, gaining lift in the current and increasing the panel's floatation. The flexible floating panel sections can be submerged if high debris loads are encountered, or if large driftwood floats over it. Later variations of the resistance board weir even include specialized plastic resistance boards that are incorporated into the ends of the weir panels that allow boat traffic to cross the weir with relative ease.

For further details of resistance board weir construction and detailed drawings, please refer to appendices (Stewart 2002).

3.0 METHODS, MATERIALS, RESULTS AND DISCUSSION

3.1 Spring Repairs and Relocation of Camp

On June 2, 2003 supplies and equipment were loaded into riverboats and transported downstream on the Yukon River to the mouth of the Chandindu River. From this point, all gear was transported upstream by jet boat and ATV to the weir site. A temporary camp was set up and an inventory of the weir materials was taken. On June 3rd and 4th, welding alterations were made to the live trap and a new campsite was cleared. A new trail was also built to transport weir and camp materials to the site. The materials were then transported upstream to the weir site by ATV. On June 5th the move was completed and the wall tent was taken down to be safely stored. The ATV, welder and all gear was transported back to Dawson.

3.2 Skills Exchange Program

On June 15th two Canadian technicians travelled to Fairbanks to take part in the installation of similar style resistance board weirs. This was co-ordinated with the USF&WS. The technicians spent nine days travelling with a USF&WS crew and participated in the installation of weirs at Gesesa and Henshaw. During this exercise it was noted that there were some minor modifications that could be done to the Chandindu River weir that would make its installation a little easier. Also noted was the fact that the rivers being used for the resistance board style weir in Alaska were much different than the Chandindu. The major differences being that they have far less depth, volume and velocity. The pictures to follow will show these differences.

3.3 Camp Set-up and Weir Installation

On June 30th, camp and weir equipment was loaded into riverboats and transported downstream on the Yukon River to the mouth of the Chandindu River. Gear was freighted upstream to the weir site by jet boat and ATV. The first trip upstream with the jet boat was successful and the gear was dropped of at the site for camp. Unfortunately, on the second trip upstream, the boat was broadsided by a floating log which resulted in the boat flipping and its freight dumping into the river. The boat was then pinned under a large sweeper. The boat was left there and camp set-up continued. The next morning, the USF&WS technicians arrived as the second part of the skills exchange program. The USF&WS technicians assessed our weir site as problematic, due to the volume and velocity of the watershed. That day and the next were spent running winch cables and safety lines across the river. We attempted to place the live pen in the middle of river and by the end of the day it was suggested by the USF&WS technicians that it was seemingly impossible to install this style of weir in the Chandindu River. The US technicians were taken back to Dawson so that they would have time to visit some of the areas other restoration projects.

July 3rd and 4th was spent removing the boat from the sweeper, performing camp set-up, and engine maintenance.

On July 5th, Pat Milligan (DFO) came to the weir site to provide his assessment of the site and to suggest a possible approach to the weir installation. It was decided that the first 40-ft of the weir should be constructed using the resistance-board style and the remainder of the weir be built using the traditional rigid type design.

By the evening of July 8th the weir was fish-proof and fully operational. The first fish was trapped on July 10th and samples and data collected uninterrupted till July 18th when the water rose to the point that it was flowing over the live pen. On

the morning of July 19th the entire section of resistance-board weir had disappeared. It was recovered approximately five miles downstream, on the Yukon River. While waiting for the water to recede on the Chandindu, the floating sections of the weir were retrieved and more tripods and stringers were constructed for the rigid weir. On the evening of July 24th, the weir was in and operational. The first salmon was trapped by 10:00pm. The weir was operational until July 31st and was disassembled on Aug 1st.

As reported in 2002, the weir design was modeled after resistance board weir designs from USF&WS (Tobin 1994); additional and detailed construction information is contained in this document (Stewart 2002). Some minor modifications were made to the weir prior to the 2003 season.

3.4 Data Collection

The weir was fish tight from July 10th-16th and again from July 24th-July 31st. During this time, the weir was monitored from 8:00 AM to 12:00 AM daily. In total, 85 chinook salmon (60 males, 25 females) were enumerated as they passed the weir (Table 1). One radio tag and a total of 9 DFO spaghetti tags were recovered from chinook salmon migrating past the weir. It took an average of 3.4 days for tagged fish to reach the weir, a distance of roughly 102kms.[1] With the exception of one spaghetti-tagged fish, which took over 22 days to be re-captured, the average migration rates of the remaining spaghetti-tagged fish (29.9km/d) are very close to average migration rates reported in other studies (Milligan et al., 1985).[2] This suggests that fish were not negatively impeded, or held up, on there migration past the weir in 2003 (Table 2). Data from 2003 was forwarded to DFO in-season and can be found in Tables 1 through 5. Biological sampling of scales

[1] The estimated distances from DFO tagging sites (Sheep Rock and White Rock) to the Chandindu River weir are 99.5km and 104 km. For simplicity, this distance has been averaged (101.8km).

[2] The long migration time of this fish is likely due to passage while the weir was breached, as this fish was enumerated after the period when the weir was compromised.

for ageing purposes was conducted, and these samples were forwarded to DFO for analysis. DNA samples were also taken from each fish. These samples were also forwarded to DFO for analysis.

4.0 RECOMMENDATIONS

Due to the limited success of the resistance-board weir in its current configuration, additional modifications are required. The panel lengths should be shortened from 20ft to 12ft. This would make it easier to manage in the swift water conditions that are present in the Chandindu River. With these changes it may be possible to combine the two systems (resistance board and rigid style weirs) with a positive result. It has also been suggested that our tripods be extended to handle the high water days. With the use of the new site (2003 relocation), additional tripods and stringers are required to accommodate the width of river. Also due to the shape of the river at this point, I feel that logs could be anchored to the far shore and extended across the river upstream from the weir. This would tend to funnel any large debris coming downstream over to the shallow side of the river where it could dealt with before getting tangled up in the weir. In the spring of 2004 it will be necessary to do some minor modifications to the live pen that will allow cables to be attached so the pen can be anchored and moved around. With some site modifications, this project will be able to collect the biological samples and data required to assist in the area-wide restoration program.

5.0 REFERENCES

Cox, J., J. Duncan, and S. Robinson. Summary of Streams in the Tr'ondek Hwech'in Traditional Area. Yukon River Panel, Restoration and Enhancement Fund Project CRE-05-97, 1997.

Duncan, J. Chandindu River Salmon Enumeration Weir Brood Stock Feasibility 1998. Yukon River Panel, Restoration and Enhancement Fund Project RE-11-98, 1998.

Duncan, J. Chandindu River Salmon Enumeration Weir Brood Stock Feasibility 1999. Habitat Restoration and Salmon Enhancement Program (HRSEP), 1999.

Milligan, P.A., Rublee, W.O., Cornett, D.D., Johnston, S.A.C. The Distribution and Abundance of Chinook Salmon (*Oncorhynchus tshawytscha*) in the Upper Yukon River Basin as Determined by a Radio-Tagging and Spaghetti-Tagging Program: 1982-1983. August 1985.

Stewart, Robert. Resistance Board Weir Panel Construction Manual. Alaska Department of Fish and Game. Regional Information Report No. 3A02-21, 2002.

Tobin, John H. Construction and Performance of a Portable Resistance Board Weir for Counting Migrating Adult Salmon in Rivers. U.S. Fish and Wildlife Service, Kenai Fishery Resource Office, 1994.

6.0 LIST OF TABLES AND FIGURES

Table 1. "Chandindu River Salmon Enumeration 2003 - Enumeration Results". Daily and cumulative totals for 2003.

Table 2. "Recovery of DFO Spaghetti Tags". Date of tag recoveries and tagging dates with migration times.

Table 3. "Chandindu River Salmon Enumeration Weir - 1998-2003 Enumeration Results". Yearly cumulative totals with male to female ratios, tag ratios, and system-wide (Yukon River in Canada) escapement estimates.

Table 4. "Cumulative Counts of Chinook Salmon on the Chandindu River 1998-2003". A summary of chinook counts on the Chandindu River.

Figure 1. "Chandindu River Salmon Enumeration Weir – Chinook 1998-2003". Graph with cumulative results plotted (note: background indicates periods in which weir has been breached due to high water).

7.0 LIST OF PHOTOS

Photo 1. Bottom Rail of Resistance-Board Weir at Henshaw Alaska.
Note: low water level and minimal current at this site.
Photo by Mel Besharah 2003

Photo 2. Assembling Live box at Henshaw.
Photo by Mel Besharah 2003

Photo 3. Rigid Weir on Left Bank of Chandindu and Rail for Resistance-Board Weir on Right Bank.
Photo by Ron McCready 2003

Photo 4. Installing Resistance-Board Weir on the Chandindu River.
Photo by Ron McCready 2003

Photo 5. Flood Waters on the Chandindu River.
Note: Resistance-Board Weir in foreground completely submerged.
Photo by Jay Farr 2003

Photo 6. Replacing the Resitance-Board Weir with Rigid-type Weir Panels.
Photo by Ron McCready 2003

Photo 7. Project Jet-Boat Swept Under Sweepers.
Photo by Ron McCready 2003

Photo 1. Bottom Rail of Resistance-Board Weir at Henshaw Alaska

Photo 2. Assembling Live box at Henshaw.

Photo 3. Rigid Weir on Left Bank of Chandindu and Rail for Resistance-Board Weir on RB.

Photo 4. Installing Resistance-Board Weir on the Chandindu River.

Photo 5. Flood Waters on the Chandindu River.

Photo 6. Replacing the Resistance-Board Weir with Rigid-type Weir Panels.

Photo 7. Project Jet-Boat Swept Under Sweepers.

Table 1. Chandindu River Salmon Enumeration 2003 - Enumeration Results					
CHINOOK					
Date	Daily Total	Cummulative Total	Cummulative Females	Cummulative Males	Cummulative DFO Tags
01-Jul-03	0	0	0	0	0
02-Jul-03	0	0	0	0	0
03-Jul-03	0	0	0	0	0
04-Jul-03	0	0	0	0	0
05-Jul-03	0	0	0	0	0
06-Jul-03	0	0	0	0	0
07-Jul-03	0	0	0	0	0
08-Jul-03	0	0	0	0	0
09-Jul-03	0	0	0	0	0
10-Jul-03	4	4	0	4	1
11-Jul-03	10	14	3	11	3
12-Jul-03	14	28	6	22	6
13-Jul-03	12	40	7	33	6
14-Jul-03	11	51	9	42	7
15-Jul-03	14	65	16	49	7
16-Jul-03	13	78	23	55	8
17-Jul-03	0*	78	23	55	8
18-Jul-03	0*	78	23	55	8
19-Jul-03	0*	78	23	55	8
20-Jul-03	0*	78	23	55	8
21-Jul-03	0*	78	23	55	8
22-Jul-03	0*	78	23	55	8
23-Jul-03	0*	78	23	55	8
24-Jul-03	1	79	23	56	8
25-Jul-03	0	79	23	56	8
26-Jul-03	0	79	23	56	8
27-Jul-03	1	80	24	56	8
28-Jul-03	0	80	24	56	8
29-Jul-03	2	82	25	57	9
30-Jul-03	3	85	25	60	9
31-Jul-03	0	85	25	60	9
* Weir breached due to high water flows					

Table 2. Recovery of DFO Spaghetti Tags				
No.	DFO Spaghetti Tag No.	DATE/TIME Captured	DATE TAGGED	Lapsed Time (days)
1	T001755	10/07/2003 14:15	08/07/2003 6:45	2.31
2	T001796	11/07/2003 14:00	09/07/2003 6:00	2.33
3	T001762	11/07/2003 18:10	08/07/2003 6:45	3.48
4	T001831	12/07/2003 10:45	10/07/2003 6:35	2.17
5	T001764	12/07/2003 23:20	08/07/2003 6:45	4.69
6	T001744	12/07/2003 23:46	08/07/2003 0:10	4.98
7	T001916	14/07/2003 19:00	12/07/2003 6:15	2.53
8	T001896	16/07/2003 12:00	11/07/2003 18:33	4.73
9	T001727	29/07/2003 21:40	07/07/2003 12:30	22.38*

AVG migration timing:	5.5
AVG migration timing w/o Fish 9:	3.4
Distance from Tagging site:	101.8
AVG Migration rate (km/d):	18.5
AVG Migration rate (km/d) w/o Fish 9:	29.9

** Long migration timing may be due to passage while weir was breached, as fish was enumerated after this period.*

Table 3. Chandindu River Salmon Enumeration Weir - 1998-2003 Enumeration Results						
	2003	2002	2001	2000	1999	1998
Total Males	60	DNS	89	DNS	161	115
Total Females	25	DNS	40	DNS	78	17
Total Chinook	85	DNS	129	DNS	239	132
Total Tagged	9	DNS	20	DNS	18	20
Tag Ratio (%)	10.6%	DNS	15.5%	DNS	7.5%	15.2%
Female Component (%)	29.4%	DNS	31.0%	DNS	32.6%	12.9%
Border Passage Estimate	48,000	30,247	54,029	16,995	23,608	22,588
Escapement Estimate	39,781	21,134	44,255	12,166	11,254	16,750

Table 4. Cumulative Counts of Chinook Salmon on the Chandindu River 1998-2003						
DATE	2003	2002	2001	2000	1999	1998
30-Jun-03					0	
01-Jul-03	0		0		0	0
02-Jul-03	0		0		0	0
03-Jul-03	0		0		0	2
04-Jul-03	0		0		0	5
05-Jul-03	0		0		0	6
06-Jul-03	0		0		0	6
07-Jul-03	0		0		0	11
08-Jul-03	0		0		0	11
09-Jul-03	0		0		0	11
10-Jul-03	4		1		0	14
11-Jul-03	14		1		0	19
12-Jul-03	28		1		0	23
13-Jul-03	40		5		0	29
14-Jul-03	51		8		0	35
15-Jul-03	65		15		0	39
16-Jul-03	78		23		1	44
17-Jul-03	78*		33		2	50
18-Jul-03	78*		50		4	56
19-Jul-03	78*		66		11	63
20-Jul-03	78*		74		12	65
21-Jul-03	78*		84		24	71
22-Jul-03	78*		86		35	75
23-Jul-03	78*		94		49	82
24-Jul-03	79		102		63	86
25-Jul-03	79		102		81	90
26-Jul-03	79		102		103	94
27-Jul-03	80		104		125	100
28-Jul-03	80		109		139	101
29-Jul-03	82		109		153	104
30-Jul-03	85		114		165	107
31-Jul-03	85		114*		184	108
01-Aug-03			114*		201	112
02-Aug-03			114*		212	113
03-Aug-03			114*		216	117
04-Aug-03			114*		219	121
05-Aug-03			114*		222	122
06-Aug-03			114*		225	123
07-Aug-03			114		228	125
08-Aug-03			118		230	125
09-Aug-03			119		231	127
10-Aug-03			119		231	128
11-Aug-03			123		231	128
12-Aug-03			124		232	128
13-Aug-03			124		234	128
14-Aug-03			124		234	128

Table 4. Cumulative Counts of Chinook Salmon on the Chandindu River 1998-2003 (Cont.)						
DATE	2003	2002	2001	2000	1999	1998
15-Aug-03			124		234	128
16-Aug-03			124		235	128
17-Aug-03			127		236	128
18-Aug-03			127		237	129
19-Aug-03			127		237	131
20-Aug-03			128		239	131
21-Aug-03			129		239	131
22-Aug-03			129		239	131
23-Aug-03			129		239	132
24-Aug-03			129		239	132
25-Aug-03			129		239	
26-Aug-03			129		239	
27-Aug-03			129		239	
28-Aug-03			129		239	
29-Aug-03			129		239	
30-Aug-03			129		239	
31-Aug-03			129			
01-Sep-03			129			
02-Sep-03			129			
03-Sep-03			129			
04-Sep-03			129			
05-Sep-03			129			
06-Sep-03			129			
07-Sep-03			129			
08-Sep-03			129			
09-Sep-03			129			
10-Sep-03			129			
11-Sep-03			129			
12-Sep-03			129			
13-Sep-03			129			
* Weir breached due to high water flows						

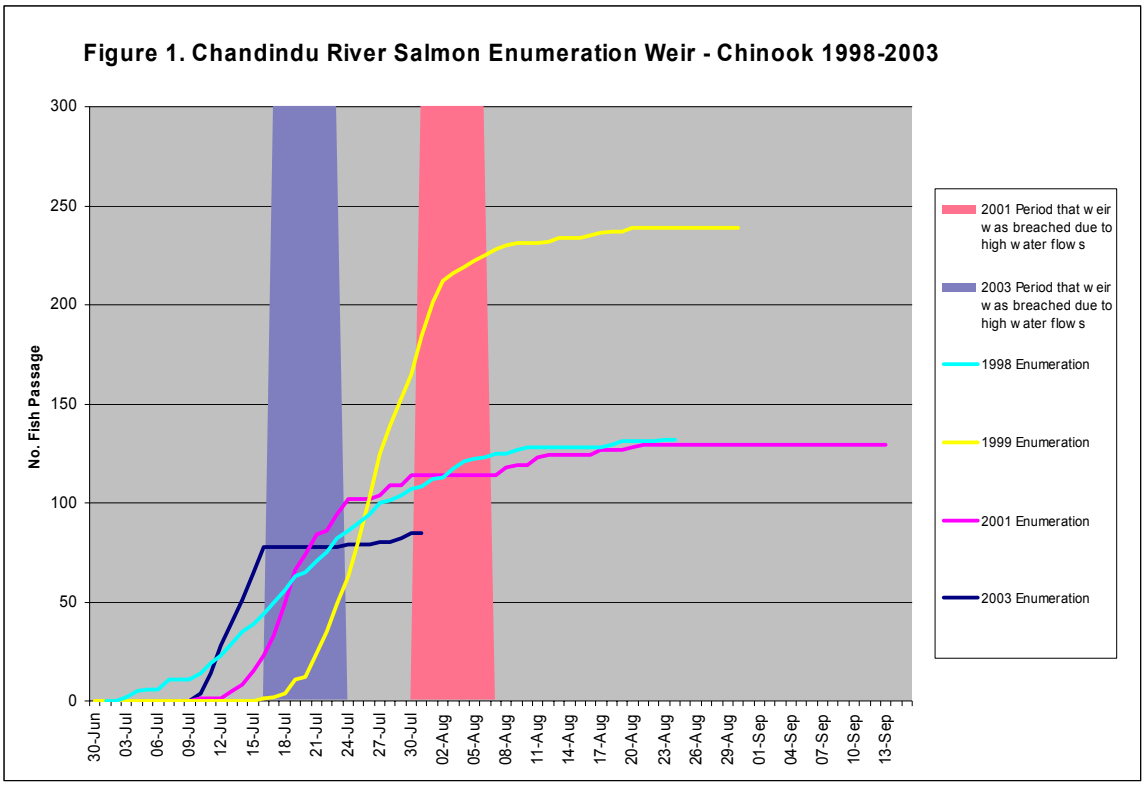
Figure 1. Chandindu River Salmon Enumeration Weir - Chinook 1998-2003
No. Fish Passage
300
250
200
150
100
50
0
30-Jun
03-Jul
06-Jul
09-Jul
12-Jul
15-Jul
18-Jul
21-Jul
24-Jul
27-Jul
30-Jul
02-Aug
05-Aug
08-Aug
11-Aug
14-Aug
17-Aug
20-Aug
23-Aug
26-Aug
29-Aug
01-Sep
04-Sep
07-Sep
10-Sep
13-Sep
2001 Period that weir was breached due to high water flows
2003 Period that weir was breached due to high water flows
1998 Enumeration
1999 Enumeration
2001 Enumeration
2003 Enumeration

APPENDICIES

Appendix A

Stewart, Robert. Resistance Board Weir Panel Construction Manual. Alaska Department of Fish and Game. Regional Information Report No. 3A02-21, 2002.

RESISTANCE BOARD WEIR PANEL CONSTRUCTION MANUAL 2002

By

Robert Stewart

REGIONAL INFORMATION REPORT[1] NO. 3A02-21

Alaska Department of Fish and Game
Division of Commercial Fisheries
Arctic-Yukon-Kuskokwim Region
333 Raspberry Road
Anchorage, Alaska 99518-1599

[1] The Regional Information Report Series was established in 1987 to provide an information access system for all unpublished divisional reports. These reports frequently serve diverse ad hoc informational purposes or archive basic uninterpreted data. To accommodate timely reporting of recently collected information, reports in this series undergo only limited internal review and may contain preliminary data; this information may be subsequently finalized and published in the formal literature. Consequently, these reports should not be cited without approval of the author or the Division of Commercial Fisheries.

AUTHOR

Rob Stewart is a Fish and Wildlife Technician IV for the Alaska Department of Fish and Game, Division of Commercial Fisheries, 333 Raspberry Road, Anchorage, AK 99518-1599.

ACKNOWLEDGMENTS

Funding for this manual was made possible by the U.S. Fish & Wildlife Service, Office of Subsistence Management, Fisheries Information Service Cooperative Agreement 01-117. This manual is one of several products included in the cooperative agreement for building research capacity in the Kuskokwim Area.

OEO/ADA STATEMENT

The Alaska Department of Fish and Game administers all programs and activities free from discrimination based on race, color, national origin, age, sex, religion, marital status, pregnancy, parenthood, or disability. The department administers all programs and activities in compliance with Title VI of the Civil Rights Act of 1964, Section 504 of the Rehabilitation Act of 1973, Title II of the Americans with Disabilities Act of 1990, the Age Discrimination Act of 1975, and Title IX of the Education Amendments of 1972.

If you believe you have been discriminated against in any program, activity, or facility, or if you desire further information please write to ADF&G, P.O. Box 25526, Juneau, AK 99802-5526; U.S. Fish and Wildlife Service, 4040 N. Fairfax Drive, Suite 300 Webb, Arlington, VA 22203; or O.E.O., U.S. Department of the Interior, Washington DC 20240.

For further information, please contact the department ADA Coordinator at (voice) 907-465-4120, (TDD) 907-465-3646, or (FAX) 907-465-2440.

TABLE OF CONTENTS

	Page
LIST OF FIGURES	iv
LIST OF APPENDICES	v
ABSTRACT	vii
INTRODUCTION	1
PARTS FABRICATION	3
PANEL ASSEMBLY	20
MATERIALS	26
PANEL REPAIR	28
LITERATURE CITED	32
APPENDIX	33

LIST OF FIGURES

Figure		Page
1.	Resistance board weir panel nomenclature	2
2.	Distance interval for picket spacing	3
3.	Pilothole templates constructed of 1/8" steel flatstock	4
4.	The five types of stringers used in a single panel	5
5.	Cutting UHMW into smaller sheets	6
6.	Illustration of base hook	8
7.	Diagram of jig for bending ½" diameter machine bolts	9
8.	Base hook dimensions	9
9.	Illustration of base cover	10
10.	Base cover profile measurements	10
11.	Illustration of a resistance board stringer support	11
12.	Illustration of the resistance board hinge	12
13.	Illustration of retaining sleeves	13
14.	Resistance board harness bearing dimensions	14
15.	Cutting grooves in harness bearings	15
16.	Harness bearing fabrication	15
17.	Resistance board harness stay dimensions	16
18.	Illustration of the resistance board harness	17
19.	Resistance board harness specifications	18
20.	Cutting resistance boards from plywood	19
21.	The two alternating stringer configurations	20
22.	Assembly rack illustration	21
23.	Panel assembly	24
24.	Clearance between the sleeve and stringer	25

LIST OF APPENDICES

Appendix Page

A: LIST OF CONSTRUCTION MATERIALS 34

B: PLANS FOR 2-5/8" PICKET SPACING

B.1. Stringer Dimensions 35
B.2. Stringer Calculation Chart 35
B.3. Base Stringer Pilothole Template Plan 36
B.4. Intermediate Stringer Pilothole Template Plan 37
B.5. Resistance Board Stringer Pilothole Template Plan 38
B.6. Base Cover Pilothole Template Plan 39
B.7. Resistance Board Stringer Support Pilothole Template Plan 40
B.8. Resistance Board Hinge Pilothole Template Plan 41
B.9. Resistance Board Hole Placement Plan 42

C: PLANS FOR 3" PICKET SPACING

C.1. Stringer Dimensions 43
C.2. Stringer Calculation Chart 43
C.3. Base Stringer Pilothole Template Plan 44
C.4. Intermediate Stringer Pilothole Template Plan 45
C.5. Resistance Board Stringer Pilothole Template Plan 46
C.6. Base Cover Pilothole Template Plan 47
C.7. Resistance Board Stringer Support Pilothole Template Plan 48
C.8. Resistance Board Hinge Pilothole Template Plan 49
C.9. Resistance Board Hole Placement Plan 50

LIST OF APPENDICES (Continued)

Appendix — Page

D: PANEL ASSEMBLY DRAWINGS

D.1. Panel Assembly Rack 51

D.2. Orientation of Stringers and Pickets 52

D.3. Placement of Retaining Sleeves 53

D.4. Resistance Board Harness Bearing Stringer Assembly 54

D.5. Resistance Board Stringer Assembly 55

ABSTRACT

The use of resistance board weirs to count adult salmon migrating in rivers has dramatically increased in recent years. Alaskan fishery managers and researchers are converting to this design as a flood resistant alternative to traditional weirs and counting towers. Over the past decade, many new resistance board weirs have been constructed in the Kuskokwim Area. While the basic design of panels that make up the face of the weir has remained the same, recent modifications have improved their use. This manual guides the user in step by step construction of resistance board weir panels. It reflects the latest panel design used by the Alaska Department of Fish and Game in the Kuskokwim Area, and includes a section on field repair.

Key Words: fish weir, floating weir, resistance board weir, fish weir construction, salmon escapement enumeration

INTRODUCTION

The use of resistance board weirs to count adult salmon migrating in rivers has dramatically increased in recent years. Alaskan fishery managers and researchers are converting to this design as a flood resistant alternative to traditional weirs and counting towers. A resistance board weir is suspended from the streambed and is allowed to sink or float depending on stream conditions. Each panel is an array of pickets, when connected together form the face of the weir. Panels are attached at their base to the stream bottom by means of a steel cable anchored to the substrate across the entire channel. The end of the panel is suspended above the stream surface by the current's upward force on an inclined resistance board. During flood conditions, panels sink below the surface, allowing debris to pass unobstructed.

Tobin (1994) demonstrated that the resistance board weir design could be adapted for use in remote locations of Alaska without the need for extensive streambed preparation. Many new weirs have been constructed using the Tobin report as a guide. It is the most relevant document available to those interested in developing these weirs. However, in recent years, panels have been significantly modified, making them sturdier and easier to install. More literature is needed to reflect ongoing improvements, and illustrate techniques for construction and operation of resistance board weirs.

This manual has been written as a "how to" guide for individuals and organizations interested in constructing resistance board weir panels. It reflects the most current resistance board panel modifications employed by the Alaska Department of Fish and Game for weirs in the Kuskokwim Area. Materials and design are similar to those described by Tobin, with significant panel modifications including narrower width, offset stringers instead of yokes to connect adjacent panels, and a different harness design to set resistance board angle.

Panel construction is addressed in three parts: 1) Materials, 2) Parts Fabrication, and 3) Panel Assembly. Materials are addressed last so that the reader has some background about their application. A Panel Repair section has been included to describe methods of repairing panels in the field.

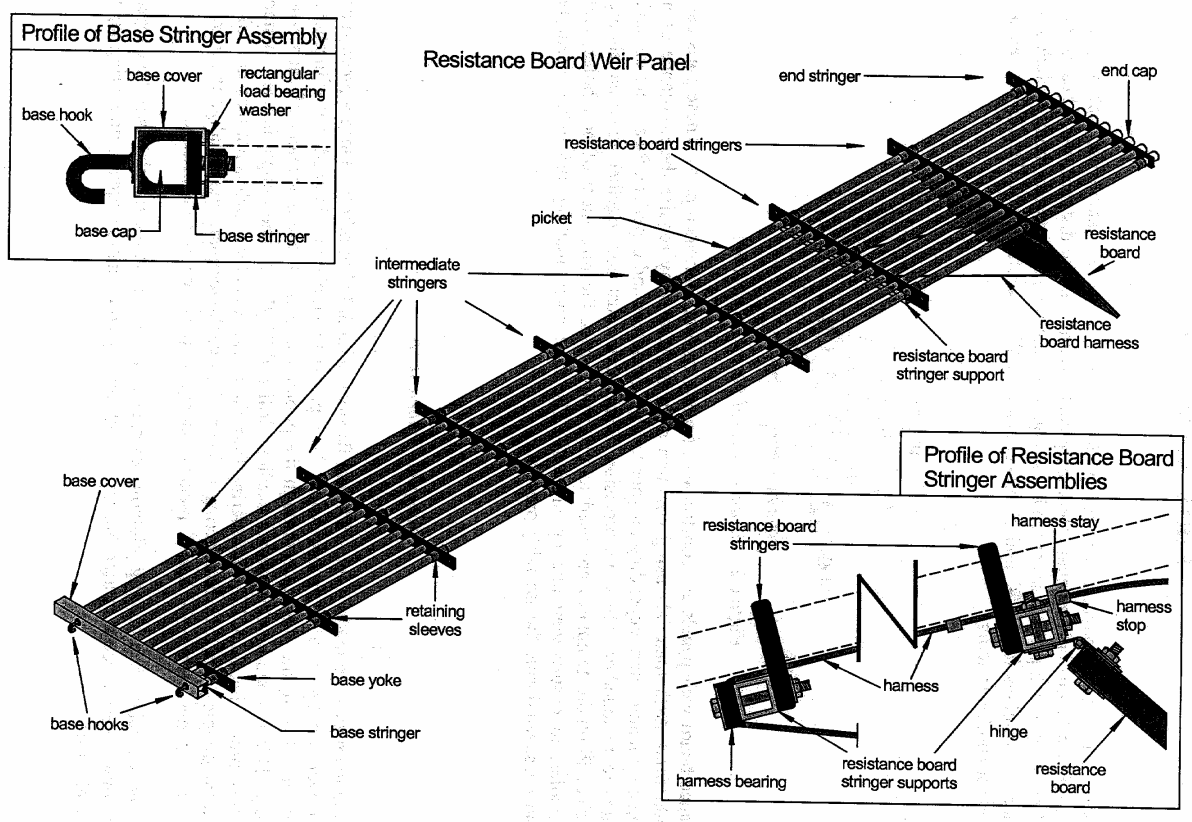

Figure 1. *Resistance Board Weir Panel Nomenclature*

2

PARTS FABRICATION

The appropriate picket spacing, for the species counted, must be established before panel construction can begin. This manual refers to "picket spacing" as the distance, in inches, of the interval between which pickets are spaced (see Figure 2), not the gap between them. Included in the appendix are plans for 2-5/8" and 3" picket spacing. With careful study, these plans can be modified for another spacing.

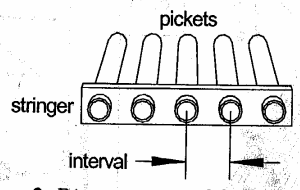

Figure 2. *Distance interval for picket spacing*

Resistance board weir panels are constructed of many custom fabricated parts. These parts can be made from stock materials using common shop tools, or may require the assistance of a welding or machine shop, depending on your level of resources and expertise. Pieces are cut and predrilled to fit together with some precision. Some parts must bolt together when panels are assembled. Pilothole templates are used to uniformly mark the placement of bolt holes, and picket holes, to ensure they line up properly. The time spent making and using pilothole templates is saved during the assembly process.

Template Fabrication

Pilothole templates are made from 1/8" steel flatstock with 3/32" pilotholes. Once a piece such as a stringer or hinge is cut to its dimension, the appropriate template is clamped to it with pliers. Dimples are drilled into the piece through the pilotholes, to mark the placement of each hole precisely. This is done quickly with a cordless drill and 3/32" bit. The dimple is used to start larger bits, preventing them from wandering from the mark. A center punch is not recommended to form the dimples, since the hammering action will move the template and misalign the marks. Plans for templates with 2-5/8" and 3" pickets spacing are provided in the appendix.

Precision is crucial when making pilothole templates. A mistake on the template will be carried over through every piece it is used on. Use a high quality combination square, measuring tape, and metal scribe.

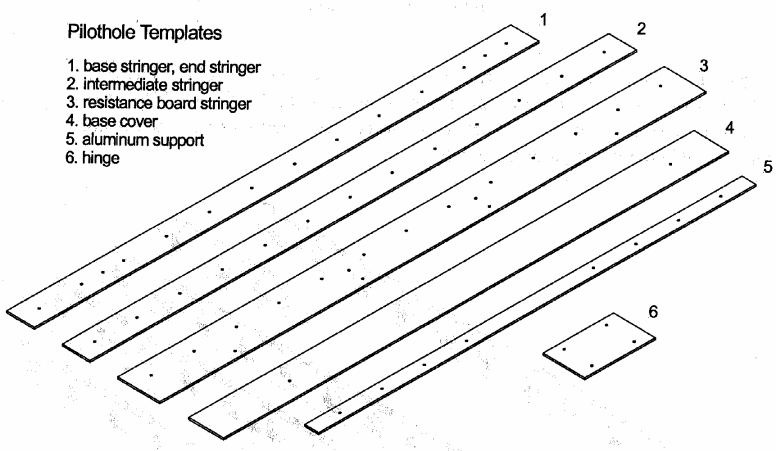

Figure 3. *Pilothole templates constructed from 1/8" steel flatstock*

Instructions:

1. Cut the appropriate width of 1/8" steel flats tock to length.
   - Make the cuts as square and accurate as possible.
2. Use a high quality measuring tape, combination square, and metal scribe to mark the template according to plans in the appendix.
   - Measure each mark from a single baseline. Do not simply measure one mark from the last.
   - If the piece is a little short or long, make two sets of marks, measuring from opposing edges, and split the difference. Use a center punch to dimple the steel.
3. Drill each pilothole with a 3/32" bit and file any sharp edges.
   - Use a center punch to dimple the steel before drilling.
   - The 3/32" hole size minimizes wear to the pilothole during use, and makes a large enough dimple to start bigger bits.
4. Make duplicates of each template.
   - Each template is easily duplicated by carefully aligning it with another piece of flatstock, clamping the two together with locking pliers, and drilling through the pilotholes.
   - Keep one set unused, from which to make replacements.

Stringer Fabrication

The stringers are made of strips cut from large, ½" thick sheets of black UHMW polyethylene plastic. Holes drilled into each strip accommodate pickets and hardware. Pilothole templates are used to mark precise placement of holes to be bored into each stringer. Edges are smoothed to reduce chafing fish swimming along the weir.

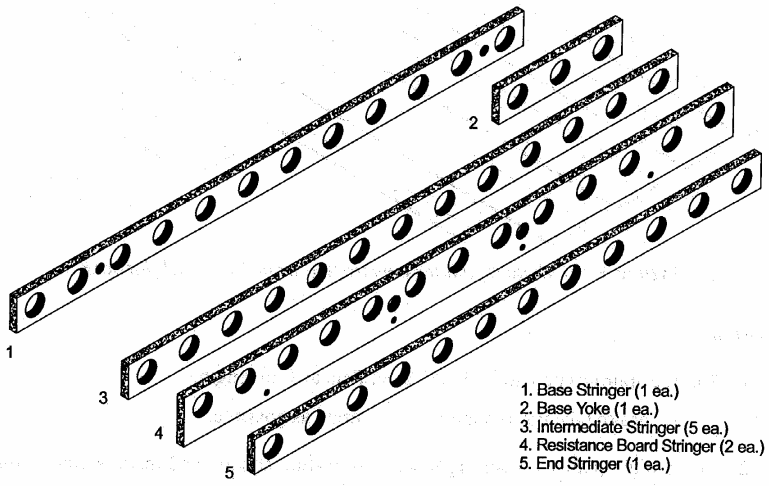

Figure 4. *The five types of stringers used in a single panel.*

Instructions:

1. Cut UHMW polyethylene.
   - The 4' x 10' sheets of UHMW polyethylene must be cut into smaller dimensions before they can be handled safely on a table saw. They are cut according to stringer length. See Figure 5.
   - See appendix B.1 or C.1 for stringer lengths of 2-5/8" or 3" picket spacing.
   - Calculate the number of sheets to cut to each length, using the table provided in appendix B.2 or C.2, depending on picket spacing.
   - UHMW is best cut using a thin kerf circular saw blade with carbide teeth. Clamp a metal straight edge to the material to guide the saw as you cut. Saw blades have a tendency to wander in UHMW, do not try to "freehand" the cut.

- Cut each sheet individually. Do not try to cut the sheets in a stack. The 4' x 10' sheets are delivered on a pallet. The pallet makes a good cutting platform.

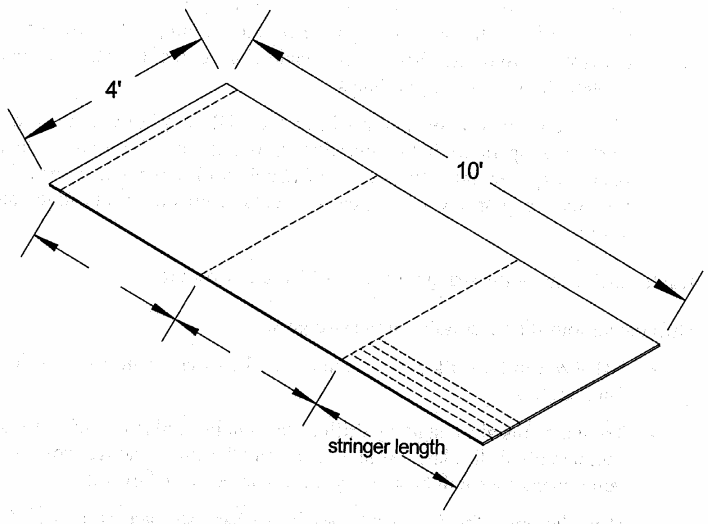

Figure 5. *Cutting UHMW into smaller sheets.*

- The UHMW material is very expensive and appropriate care should be given to each cut. Double check each measurement before cutting, and remember to account for the width of the saw blade if necessary.

2. Cut stringers to width using a table saw.
   - Base, intermediate, and end stringers are cut 2-1/8" wide and resistance board stringers are cut 3" wide.
   - Be careful to cut the sheet in the correct orientation, along the stringer length. Remember that the base and end stringers are shorter, by one picket spacing, than the intermediate and resistance board stringers.
   - Make a few extra intermediate stringers from which to cut the base yokes.
   - Check the alignment of the saw fence frequently by measuring the width of the last piece cut. The repeated motion of the sheet being slid into the fence may bump the fence farther away from the blade.
   - Save any leftover strips, 1-1/4" and wider. These will be used to make the harness bearings.

3. Mark the hole placement using the appropriate pilothole template for each stringer.
    - Align the pilothole template so that it is centered on top of the stringer, and clamp them firmly together with locking pliers.
    - Drill 3/32" pilotholes into plastic stringer using a hand-held or cordless drill. Do not drill all the way through the plastic. A dimple 1/8" deep is all that is necessary. Hold the drill as perpendicular to the template as possible to prevent deforming the pilotholes.
    - If weir construction occurs in winter, the UHMW plastic must be warmed up to room temperature before marking the placement of bolt holes. Polyethylene plastic expands and contracts considerably with temperature. Bolt holes may not line up properly if marked at a cold temperature and assembled when warm.
4. Router each edge of the stringer using a 1/8" round over bit.
5. Drill the various diameter holes in the stringers.
    - UHMW can be drilled with small twist bits (less than 3/4"), paddle bits, or Forstner bits.
    - To avoid mistakes, start by drilling the smaller holes in each stringer. If you accidentally drill a large hole where a smaller hole belongs, you cant fix it. If you misplace a small hole, a larger one can be drilled over it.
    - Drill the holes for the base hooks in the base stringer using a 9/16" twist or paddle bit.
    - Drill bolt holes on the resistance board stringers with a 5/16" twist bit.
    - Drill cable harness holes in resistance board stringers using a 7/8" paddle bit.
    - Drill picket holes using a drill press with 1-3/8" Forstner bit at a low RPM. Relax pressure on the bit several times while boring. This will break the shaving and prevent it from becoming entwined in the bit.

Base Hook Fabrication

A pair of hooks attaches the base of each panel to a cable anchored across the stream bottom. The base hooks are cold bent from ½" x 8" grade 2 machine bolts. A rectangular washer, along with a hex nut, is used to attach the hook to the base cover. This washer is made to fit between the pickets and distribute the hook's load to the aluminum base cover, instead of directly to the UHMW plastic stringer. See Figure 6.

Fabrication requires cold bending the ½" bolts and, depending on your resources, may require the assistance of a professional shop. A tool called a "parts bender" can be purchased fairly

cheaply. However, it may be difficult to find one of these tools suitable for bending ½" mild steel around such a small, ¾" radius. Otherwise a simple jig can be made and mounted in a bench vice, using a rigid steel pipe as a lever to bend the hooks by hand. See Figure 7 for a diagram describing the construction of a bending jig.

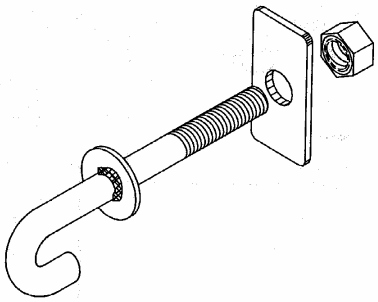

Figure 6. *Illustration of base hook*

Instructions:

1. /Cut the hex head off each bolt using a chop saw, leaving the shank 7-7/8 " long.
    - Use a grinding wheel to remove the burs from the shank, but do not round the cut edge over. A square end is needed to hold the shank securely in the jig as it is being bent.
2. Bend the hooks into shape.
    - The hooks should be within a 1/8" tolerance of the dimensions specified in Figure 8. Some experimentation will be necessary to get the right bend, so have extra bolts on hand.
3. Weld a 7/16" flat washer onto the shank of the hook.
    - Make sure there is 1" clearance between the washer and the tip of the hook. See Figure 8.
    - It is not necessary to weld all the way around the circumference. Two or three small welds should do the job.
4. Shear or cut the rectangular load-bearing washer from 1/8" x 1-1/4" steel flatstock to a length of 2-3/8".
5. Punch a 17/32" hole in the center of the washer and grind the corners off and edges smooth.
    - If the holes are to be drilled instead of punched, cut the flatstock to length after holes are drilled every 2-3/8" on center.

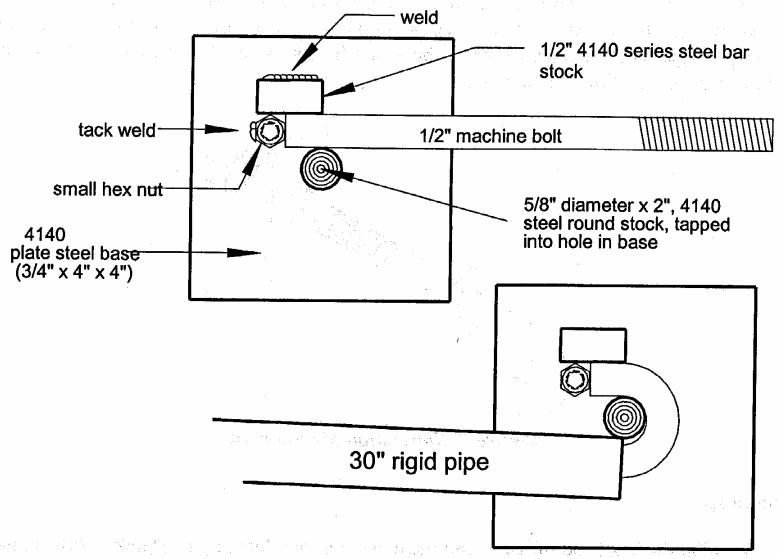

Figure 7. *Diagram of jig for bending ½" diameter machine bolts*

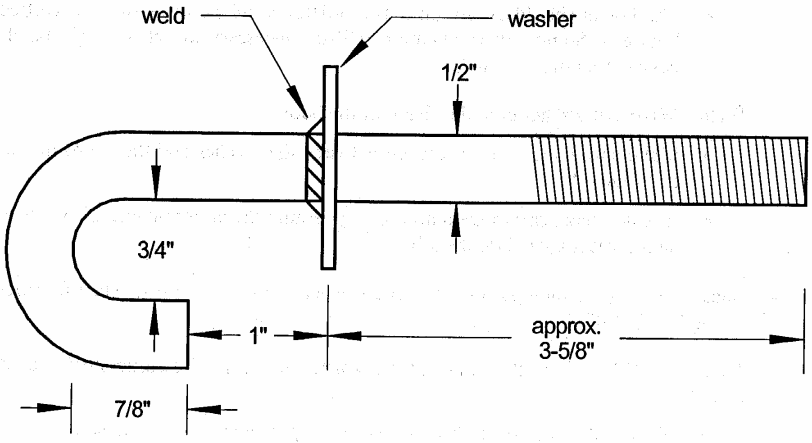

Figure 8. *Base hook dimensions*

Base Cover Fabrication

The base cover serves as an attachment structure for the base hooks. It is made from 2-1/2" square aluminum tubing, with a 1/8" wall thickness, available in 21' lengths.

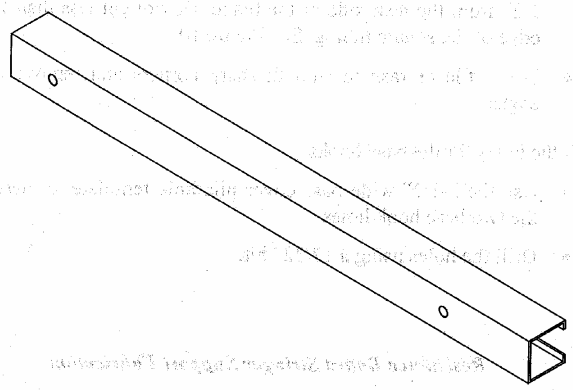

Figure 9. *Illustration of base cover*

Instructions:

6. Cut the 2-1/2" rectangular tubing to 35-3/4" lengths.
   - Each 21' length of tubing yields 7 pieces.
   - The base cover does not necessarily need to be as long as the UHMW base stringer

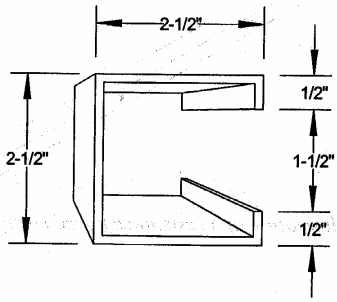

Figure 10. *Base cover profile measurements*

7. Cut a 1-1/2" wide channel down the center of one side, using a table saw.

- Use a circular saw blade with a high count of carbide teeth.
- Use a suitable cutting lubricant to prevent aluminum from sticking to the blade. If aluminum builds up on the blade, it will cut roughly and remove too much material.
- Set the blade so that it extends above the surface about ¾", and set the fence 1/2" from the near side of the blade. Do not cut less than ½" from the corner edge of the square tubing. See Figure 10.
- Use a file or rasp to smooth sharp corners and remove burs along the cut edges.

8. Drill the holes for the base hooks.
    - Use the 2-1/2" wide base cover pilothole template to mark the placement of the two base hook holes.
    - Drill the holes using a 17/32" bit.

Resistance Board Stringer Support Fabrication

The resistance board stringer supports are made from 1" aluminum square tubing with a 1/8" wall thickness, available in 21' lengths. The supports are bolted to the two stringers that support the resistance board. They give rigidity to the stringers and a sturdy attachment point for the resistance board hardware.

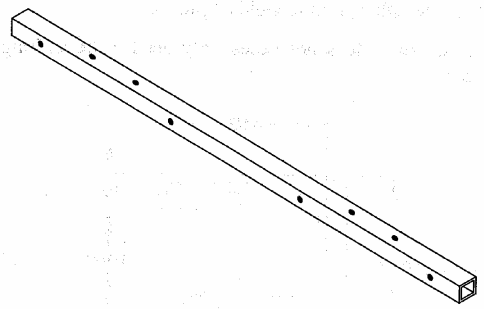

Figure 11. *Illustration of a resistance board stringer support*

Instructions:

1. Cut aluminum tubing to length.
    - Pieces are cut to 31" length for either picket spacing.

- Each 21' length yields eight 31" pieces.

2. Mark the bolt holes using the appropriate pilothole template.
   - The 3/32" pilothole bit need only dimple the aluminum deep enough to properly start a larger bit.
   - Use tape to cover the pilotholes for the hinges when marking the stringer bolt holes, and vice versa.
   - Mark the stringer bolt holes in all of the pieces. Mark the hinge bolt holes on the adjacent side of only half of the pieces.
3. Drill the holes to 9/32" through both sides of the support to accommodate a ¼" bolt.
   - Use a drill press set to the proper RPM for the bit diameter in the material being drilled.

Hinge Fabrication

Resistance board hinges are fabricated from #16 gauge stainless steel continuous hinge with a 3" open face leaf, 5/8" knuckle, and a 3/16" pin. Specifications may vary between manufacturers, so an equivalent hinge or stronger is necessary. Continuous hinge is generally available in 6' or 8' lengths. The hole spacing has been designed so that the holes line up with gaps between the pickets during panel assembly.

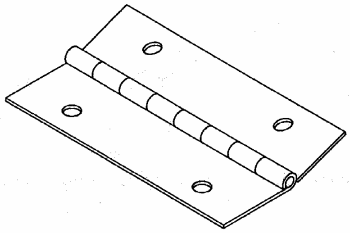

Figure 12. *Illustration of the resistance board hinge*

Instructions:

1. Shear or cut the hinge to the length specified in the plans for the given picket spacing.
   - Stainless steel continuous hinge can be cut with a band saw, but this is very time consuming. It can be sheared quickly at a welding or machine shop. However, the hinge must be folded in order to minimize deformation while shearing.

2. Tack weld the pin to the leaf, at one end only, to keep the pin from slipping out.

3. Remove sharp edges with a grinding wheel.

4. Mark the placement of the bolt holes using the appropriate pilothole template.
   - Cut a groove across the width of a 2x4, so that the open hinge will lay flat on the 2x4 with the knuckle of the hinge fitting inside the groove. In this position, the template can be clamped to the open hinge with locking pliers.
   - The 3/32" pilothole bit need only dimple the material deep enough to start a larger bit.

5. Drill the bolt holes with a 9/32" bit to accommodate ¼" bolts.
   - Use a drill press set to the proper RPM for the bit diameter in the material being drilled.

Retaining Sleeve Fabrication

Pairs of retaining sleeves hold the stringers in position along the panel's length. The retaining sleeve is made from a section of 1-1/4" schedule 80 PVC conduit. The inside diameter of the sch. 80 conduit is just smaller than the outside diameter of the 1" sch. 40 PVC picket. This allows for a compressed fit when the sleeve is snapped onto the picket. The 1-1/4" conduit is available in 10 ft. lengths. Each panel requires about 40 sleeves. Make plenty of extra pieces.

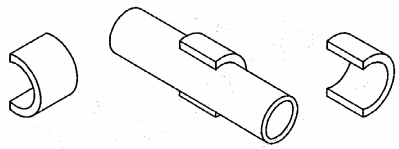

Figure 13. *Illustration of retaining sleeves*

Instructions:

1. Run the pipe through the table saw, removing about 5/8" from the diameter.
   - If the conduit has a flared bell on one end, cut the bell off an inch or two before the flair, before running it through the table saw.
   - Two people are required to draw the 10' pipe through the saw steady enough not to twist the cut or bind the blade.
   - Make an experimental cut and test to fit on a piece of 1" PVC picket. The sleeve material should snap onto the picket easily, and hold with a firm grip.

2. Cut the pieces to length using a radial arm or miter saw.
   - Cut the pipe section every 1-1/2 inches, making the finished sleeve length a blade width shorter than this.
   - It may be necessary to install a jig onto the saw to prevent it from throwing the sleeve during the cut.

Harness Bearing Fabrication

The harness bearing forms the radius around which the cable harness follows through the upstream resistance board stringer. The purpose of the bearing is to create a large enough radius around which the cable can bend 180 degrees without severely kinking. The bearings are made from excess ½" thick UHMW plastic left over from stringer fabrication. Strips at least 1-1/4" wide and up to 4' long are suitable. A table mounted router is used to shapes the pieces.

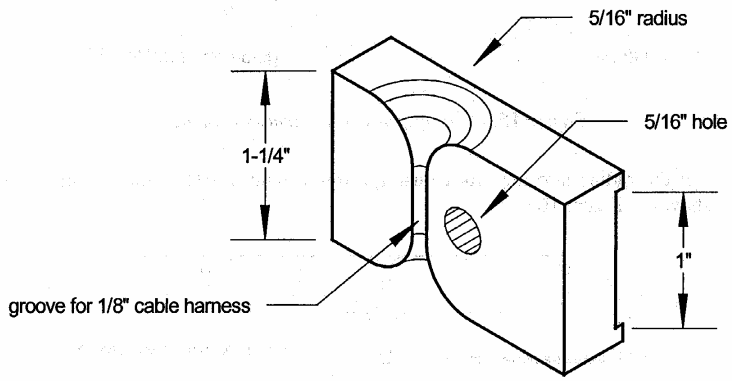

Figure 14. *Resistance board harness bearing dimensions*

Instructions:

1. Cut the excess UHMW strips to 1-1/4" width using the table saw.
2. Cut a channel to fit a 1" square resistance board support tube.
   - Use a 5/8" straight cut channel router bit to remove a channel 1/16" deep by 1" wide, from the center of one side of the 1-1/4" strip. A lip 1/16" high and 1/8" wide, is left on either side of the channel.
   - Check that a length of 1" aluminum square tube fits snug inside the channel.

3. Cut the cable grooves into the UHMW strip.
   - Using a 3/16" round nose router bit set 5/32" above the table surface, router a groove across the strip as illustrated in Figure 15.
   - A guide must be installed on the table to steady the piece as it passes over the bit. The guide should be installed to cut a groove every 2". A rigid steel rod, 3/16" in diameter, mounted to the table, 2" perpendicular from the center of the bit, will fit inside the adjacent groove to guide the next cut. See Figure 15.

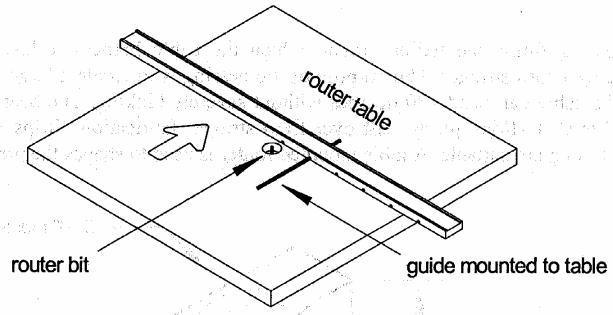

Figure 15. *Cutting grooves in harness bearings*

4. Cut the radius into the groove using a router with a 5/16" radius round over bit, as shown in Figure 16 a.

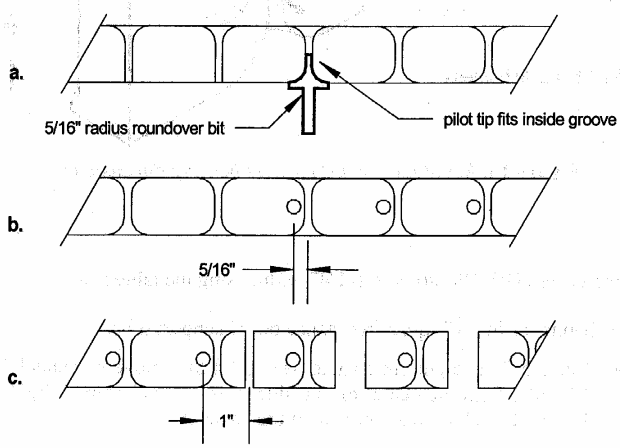

Figure 16. *Harness bearing fabrication*

5. Drill the 5/16" hole to one side of the groove as shown in Figure 16 b.

6. Cut the strip into individual pieces as shown in Figure 16 c, using a radial arm or compound miter saw.

Harness Stay Fabrication

Harness stays are made from 1-1/2" x 3/16" aluminum angle. These are fashioned to bolt to the aluminum support of the resistance board stringer, and serve as an anchor point to fasten the resistance board harness.

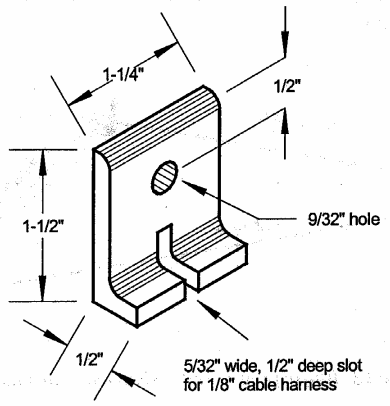

Figure 17. *Resistance board harness stay dimensions*

Instructions:

1. Cut the angle into 3 ft. lengths, then run each length through the table saw, removing 1" from one leg of the angle.

2. Drill 9/32" holes to accommodate ¼" bolts.
   - Space the 9/32" holes every 1-3/8" to 1-7/16" apart, depending on the thickness of the blade intended to cut the angle into individual pieces.
   - These holes are centered ½" in from the tapered margin of the length.

3. Cut slots for the 1/8" aircraft cable harness.
   - Using a table saw and right angle brace, cut the slots ½" deep aligned with the holes.

- Use a blade that leaves a cut wide enough for the 1/8" cable to slide into easily.

4. Cut the length into individual pieces with a miter saw.

Resistance Board Harness Fabrication

The cable harness is used to set the angle of the resistance board with respect to the water flowing beneath it. It is composed of a 10' length of 1/8" stainless steel aircraft cable. This is attached to the resistance board at one end with an eyebolt. A series of stops, swaged along a portion of its length, fixes the position of the resistance board. A loop at the other end is used to pull the harness when setting it.

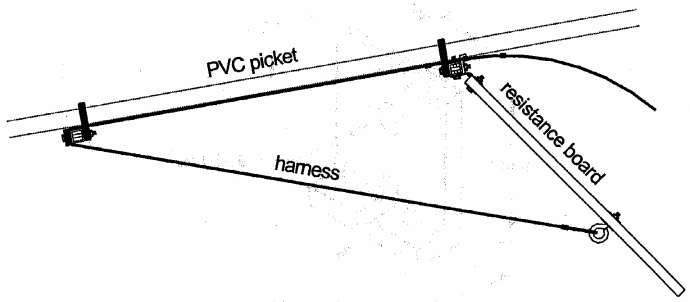

Figure 18. *Illustration of the resistance board harness*

Instructions:

1. See Figure 19 for harness specifications.
2. Feed 3 buttonhole stops onto the cable and slide them out of the way.
3. Swage an eye into the end of the cable.
   - Link the thimble with the eyebolt, using pliers to open and close the thimble.
   - Use a swaging tool to crimp the sleeve so that the cable fits snugly around the thimble.
4. Mark the cable at the three stop positions with a felt tip pen and crimp the stops.
   - Make a jig from a 2 x 4 x 8' plank on which to mark the cable.
   - Drill a 5/16" hole at one end of the plank and insert the shank of the eyebolt.

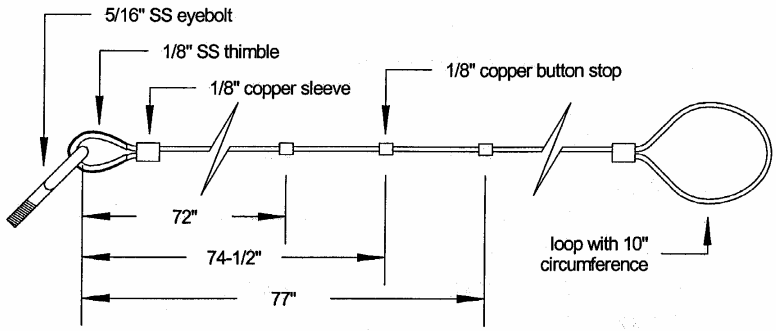

Figure 19. Resistance board harness specifications

- With the eyebolt fixed in place, pull the cable taut and mark the stops with a felt tip pen.
- Crimp the stops on their respective marks.

5. Cut the cable at 10' and crimp the remaining loop at this end.
   - The loop must be big enough to grab, about 10" circumference.
   - A high quality cutting tool will make a clean cut, making the cable easier to feed through the sleeves.

Resistance Board Fabrication

The resistance board is made of ¾" AC plywood, painted with oil based enamel. A 4' x 8' sheet of plywood yields 5 resistance boards at 2' x 3' each, with a 1' x 2' excess piece.

Instructions:

1. Cut plywood as illustrated in Figure 20.
2. Paint the boards with an oil based enamel paint and allow them to dry.
3. Drill the eyebolt holes and one of the hinge bolt holes according to measurements provided in appendix B.9 or C.9, depending on picket spacing.
   - The single hinge bolt hole makes it easy to position the board onto the stringer when assembled. Do not drill all the hinge holes at this point.
   - Use one predrilled board as a template to drill the rest.

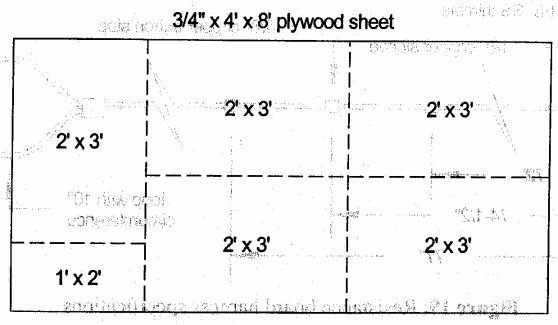

Figure 20. *Cutting resistance boards from plywood*

PANEL ASSEMBLY

Panel assembly requires a large, well ventilated workspace, and temperatures above 50° F. A 30' by 60' space is ideal, allowing room to store the conduit, and plenty of space to assemble the 20' panels. Assembly may take place outdoors during the summer months, as long as materials can be kept clean and dry. During the winter months, assembly must be conducted in a heated building with adequate ventilation. The PVC conduit must be kept clean, dry, and warm. Storing the conduit outside in the cold and bringing it into a heated environment will cause it to sweat, requiring considerable drying time before cementing can be attempted.

Panels are assembled in two alternating configurations so that the stringers of one panel are offset 2" from an adjoining panel. In this way the panels are joined together with a connecting picket. When assembled, all stringers are spaced 29" apart except for the base stringer and the first intermediate stringer. The two configurations are the same except for this small difference, creating the stringer offset. See Figure 21.

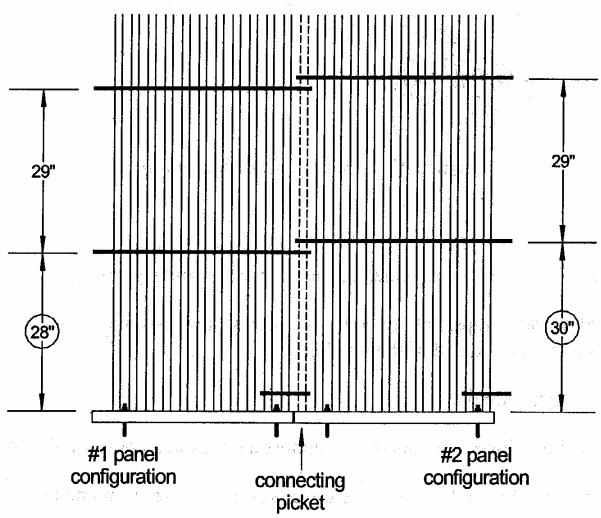

Figure 21. *The two, alternating stringer configurations.*

Each panel is assembled on a rack that holds the stringers in the appropriate configuration for assembly during the cementing process. The PVC cement must be given sufficient time to "set up" before the panel can be carefully moved. Twenty minutes after the last cement bond is adequate time before removing the panel. If workspace allows, two racks are used, one for each panel configuration. This speeds assembly by allowing one panel to "set up" while the next is

assembled. If there is only room for one assembly rack, the configuration of the rack can be changed. Once half the panels are built in one configuration, the rack can be reconfigured to build the second half in the other stringer configuration.

Assembly Rack Construction

The panel assembly rack is easily constructed of 2" x 8" x 18' dimensional lumber with 2" x 4" sawhorses and some plywood scraps. A detailed construction drawing is provided in appendix D.1.

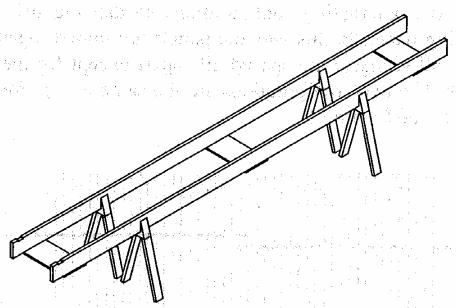

Figure 22. *Assembly rack illustration*

Instructions:

1. Set the 2" x 8" planks on edge, 22" apart, parallel and square.
2. Nail plywood scraps, left over from making the resistance boards, across the two planks at either end and in the middle.
3. Turn the structure over.
4. Construct and install sawhorses to support the rack at a comfortable working height.
5. Cut a pair of slots to hold the base cover several inches from one end.
   - Cut squarely across the rack, ½" deep and 2-1/2" wide.
6. Mark the stringer positions along the edges of the 2" x 8" planks.
   - Measure according to appendix D.1, using the nearest edge of the slot as a baseline. Do not simply measure one mark from the last.
7. Drive a pair of nails beside the marks to hold stringers securely on edge.

PVC Cement Bonding Instructions

PVC cement bonding requires the use of substances that contain hazardous chemicals. Consult the Material Safety Data Sheet (MSDS) for safe and proper handling of PVC cement and purple primer. The U.S. Department of Labor, Occupational Safety and Health Administration requires that manufactures and distributors of hazardous materials make MSD sheets available to users. These sheets can be found on line by searching *PVC cement MSDS*. Use rubber gloves, safety goggles, and a respirator with a solvent filter when working with PVC cement and primer.

Panel strength and integrity relies primarily on quality PVC cement bonding. This is the most critical aspect of the assembly process. These procedures must be followed carefully so that proper strength is achieved with each bond.

Temperatures of the working environment, cement, and all materials must be at least 50° F for the cement to bond properly. PVC cement bonds can be made at lower temperatures, but the process needed is time consuming and impractical for this application.

Directions:

1. Apply purple primer to both bonding surfaces.
    - Make sure 100% of each surface is primed.
    - Avoid spilling or dripping of excess primer to help reduce fumes released during application. Empty some of the primer from a full can into another container allowing room to shake the dauber inside the opening of the can so that it will not drip excessively during application.
    - The purpose of the primer is to soften the surface of the PVC plastic so that the cement can form a chemical bond with the plastic. The softening takes place seconds after application. The colder the temperature, the longer the primer takes to work. Test the consistency by lightly scraping the primed surface.
    - Once the primer softens the plastic, the cement can be applied. Do not allow the primer to fully evaporate before applying the cement. The primer evaporates in just a few minutes, leaving a hard surface. If this occurs before the cement is applied, prime the plastic again.
2. Apply an even layer of cement to the bonding surface.
    - Use gray, medium body PVC cement. It should have an even flowing liquid consistency. Do not use the cement if it is "jelly like" or "stringy". If the cement has been frozen or stored in a cold place, make sure it has been thoroughly warmed before using.
    - Coat the surface of the cap or retaining sleeve only. It is not necessary to apply the cement to the picket.

- Make sure 100% of the surface is coated. Avoid puddling the cement.

3. Join the two pieces together as soon a possible.
   - The cement must be in a flowing liquid state when the surfaces are joined in order to create a good bond.
   - When joining a cap to the end of a picket, twist the cap about ¼ turn as you push it into position. The inside of the cap is slightly tapered giving it a tendency to slide away from the end of the pipe while the cement is still liquid. Hold the cap for a few seconds to ensure it doesn't slide back as the cement sets up.

Curing time is temperature dependent for PVC cement. The colder the temperature the longer it takes to fully cure. The cement bond will "set up" in seconds and will feel secure. However, the bond is still delicate and should not be handled for 15 or 20 minutes. After this time the panel can be carefully handled and moved. Several days may be needed to fully cure.

Make sure the primer and cement containers are tightly closed when not in constant use. This will preserve the cement and help reduce the fumes in the working environment.

Assembling Panels

The panel is assembled upside down with the resistance board side facing up.

Instructions:

1. Cut off the bell end of each picket.
   - If the 20' PVC conduit pickets are bell and socket style with a flared bell at one end, the bell should be cut off several inches before the flare, to allow the installation of 1" socket caps.
   - Make the cuts clean, uniform, and square.
2. Set the stringers in position on the rack and thread the pickets through the stringers.
   - Orient the stringers and pickets as shown in appendix D.2. Make sure the connecting picket holes are aligned correctly, and base cover is in the right orientation.
   - Remember to install the base yoke.
3. Cement the caps on both ends of the pickets.
   - Carefully follow the directions for PVC cement bonding given on page 22.

- Before cementing the caps, double-check that the configuration of the stringers and pickets is correct as illustrated in appendix D.2.

4. Align the stringers and pickets into their final position for #1 or #2 configuration.
   - Give the caps a few minutes to set up and gently slide the base cover over the caps and base stringer. See Figure 23, caption *a*.
   - Push the base cover forward and set it firmly into the slot in the rack. See Figure 23, caption *b*.
   - Slide the end stringer back to the end caps. See Figure 23, caption *c*.
   - Position the base yoke 3-1/2" back from the base stringer.

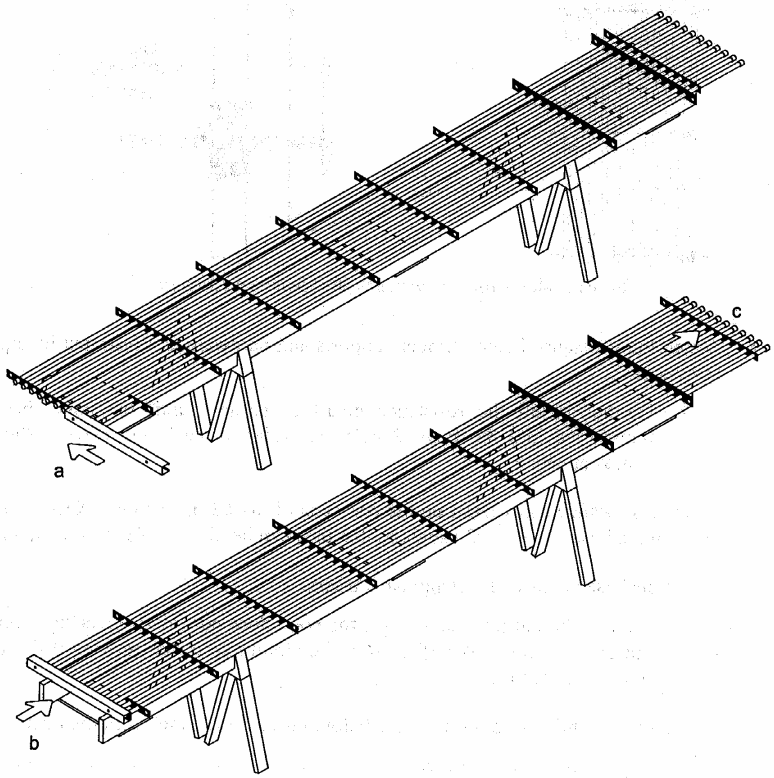

Figure 23. *Panel assembly*

5. Cement the retaining sleeves to the pickets.
    - Carefully follow the directions for PVC cement bonding given on page 22. Make sure the bonding surfaces get 100% coverage of the primer and cement.
    - Check that the base cover is fixed securely inside the slot before cementing any of the sleeves into place.
    - See appendix D.3 for the correct position of retaining sleeves.
    - When placing a pair of sleeves on either side of a stringer, leave 1/16" to 1/8" clearance as shown in Figure 24. This will prevent compression of the sleeves against the stringer when the picket is flexed.

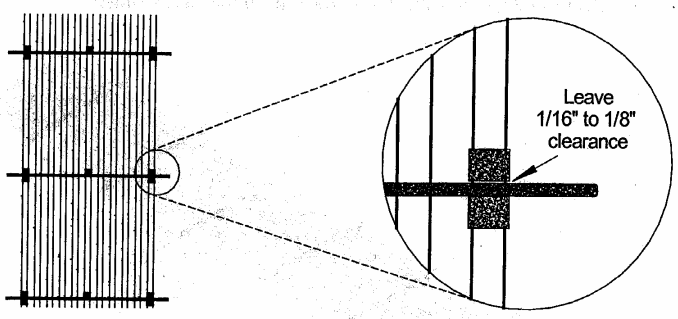

Figure 24. *Clearance between the sleeve and stringer*

6. Attach the resistance board stringer supports and hardware as illustrated in appendix D.4 and D.5.
    - Do not install the resistance board or harness until the panel has been transported into the field. Panels are easier to stack and carry without the boards attached.
7. Use red or orange spray paint on the end caps of the #2 panels only. Drill two small holes in the base cover of #2 panels so that they can be distinguished from either end.
8. Install the base hooks and rectangular washers.
    - Tighten the nut just enough that the hook does not rotate. Over tightening the nut on the base hook will deform the aluminum cover, making it difficult to remove for repair.
9. Allow 15 to 20 minutes of curing time before moving the panel from the rack.
    - If you have a second rack, you can assemble the next panel while the first is curing.

MATERIALS

A complete list of materials for panel construction is included in appendix A.

Purchasing

Large quantities of certain materials may require several months for delivery. Special consideration should be given when ordering the following items:

UHMW (ultra high molecular weight) polyethylene plastic is used to make the stringers and should be ordered as early as possible. Stringers constitute most of the work during fabrication. This material should be ordered using the following description:

UHMW polyethylene, ½" black mill plate, regrind, 4' x 10' sheet.

- This product comes in several different grades. Regrind is a grade that incorporates recycled material, is the least expensive, and meets the needs for stringer construction.
- Black mill plate is resistant to ultra-violet light from the sun, and should not be substituted.

PVC (polyvinyl chloride) electrical 1" conduit for the pickets makes up the largest single purchase. Delivery should be made to the location where panels will be assembled. Use the following description when ordering picket material:

1" Schedule 40 PVC electrical conduit, gray, UV resistant, 20' lengths, both ends plain.

- 1" Schedule 40 refers to the nominal pipe size and wall thickness.
- PVC electrical conduit is designed for above ground outdoor use. It is gray colored and contains an additive making it resistant to ultra violet light from the sun.
- Lengths of twenty feet must be specified since it is more commonly stocked in lengths of ten feet.
- "Both ends plain" refers to the style of pipe end available. PVC conduit is typically stocked with bell and socket style ends. Each pipe has a flared bell at one end in which the plain end can be inserted like a socket, to join two pipes. Each bell must be cut off in order to cap the ends of the picket. If the pipe can

be ordered with both ends plain style, you will save an extra step in construction.*

1-1/4" Schedule 80 PVC conduit, used to make the retaining sleeves, must have a schedule 80 wall thickness to fit tightly around the 1" PVC pickets.

1" PVC socket caps must fit inside the base cover and, therefore, must not exceed 1-11/16" in length (1-5/8" is a common length). Confirm this dimension with the vendor when ordering.

- Caps do not need to be gray electrical fittings. White caps used for plumbing are fine.

MSDS (material safety data sheets) should be requested when ordering PVC Cement and Primer.

½" x 8" machine bolts used to make the base hooks must be grade 2 strength in order to cold bend. The bolts should not be zinc plated or galvanized, because these coatings create noxious gases when welded.

1/8" aircraft cable used to make the resistance board harness should be stainless steel (304 series stainless is adequate for fresh water applications). Unless it is extremely high quality, galvanized aircraft cable will fail in just a few short seasons.

* The use of spigot plugs to plug the bell end of the picket is not recommended. Spigot plugs are too short for the tapered bell, will fit loosely, and may leak water into the picket. A socket cap at both ends of the picket will insure a better seal.

PANEL REPAIR

Routine repairs to resistance board weir panels are necessary during and after each field season. "Wet repairs" are used during operation when the panels are installed in the river, These repairs are considered temporary, to get the panel through the rest of the season. "Dry repairs" are more permanent and require the use of PVC cement bonding. These repairs are conducted before or after each field season, or with the panel out of the water.

Repairs commonly involve a broken picket or displaced stringer. Picket damage may occur simply from personnel stepping carelessly as they walk on the face of the weir, or mishandling panels as they are carried in or out of the river. Large debris can break pickets during a flood. Bear activity can also be very destructive to the weir if not prevented. A stringer becomes displaced if a retaining sleeve picket breaks, or a retaining sleeve slides out of position as the result of a weak cement bond.

Prevention is the best way to approach the damage problem. Bears should be vigorously discouraged from fishing at the weir site. Personnel should step along stringers, with their feet perpendicular to the pickets, and avoid placing too much weight on a single picket. When carrying panels into or out of the water, at least two people should lift, each with both hands holding two separate pickets, in order to distribute the load.

Wet Repairs

Wooden dowels and stainless steel hose clamps are used to make common repairs while panels are in the water.

Splicing a Broken Picket

A wet repair is made by inserting a 1" diameter wooden dowel inside the picket to splice the brake. The dowel must be kept in a dry place to prevent the wood from swelling with moisture.

1. Cut 1" diameter wooden dowel into 4" lengths.
2. Wrap a ½" wide strip of duct tape several times around the middle of the 4" dowel.
    - The duct tape will prevent the dowel from sliding too far into the picket.
3. Join the picket by inserting the dowel into each end of the break.

- The river water will cause the dowel to swell, holding it firmly inside the pipe.
- If the dowel does not fit inside the pipe, the diameter can be shrunk in a few hours using heat.
- If the dowel is not secure, a sheet rock screw can be driven through the plastic pipe into the wood.

Realigning Displaced Stringers

Stringers that have moved out of position can be reset and held in place by replacing dislocated or missing retaining sleeve with stainless steel hose clamps.

Dry Repairs

The weir panels require close inspection each season before installation. Wet repairs from the previous season should be redone using more permanent dry repair methods. Dry repairs should be made with the panel on an assembly rack, similar to the one described in the panel assembly section of this manual, without the protruding nails which hold stringers in place.

Splicing a Broken Picket

A 1" PVC pipe fitting, called a socket coupler, is used to splice the picket back together.

1. Cut each end of the break square using a compass saw, or reciprocating power saw with a narrow blade to fit between the pickets.
    - Make the splice near a stringer, where there is more support, rather than midway between two stringers where the picket has more flex.
2. Join each end of the break to the coupler with PVC cement.
    - Follow the procedures for PVC cement bonding on page 22 of this manual.

Replacing an Entire Picket

It may be necessary to replace the entire picket if it has too many breaks, or has been shattered over the winter by ice expanding inside of the picket.

1. Remove the base hooks and slide the base cover off.

- The base cover may be choked with sand, making it difficult to remove. Flush the base with water to remove as much sand as possible.
- Do not pound the aluminum base cover with a metal hammer. This will deform the aluminum, making it even more difficult to remove. A hammer can be used to tap against a piece of wood placed on the end of the cover.
- The outer pickets can be removed without removing the base cover by inserting a compass saw into the end of the cover and cutting through both the cap and picket.

2. Replace the damaged picket and cement PVC caps onto both ends.
   - Follow procedures for PVC cement bonding found on page 22.
3. Replace the base cover and hooks.
   - Do not over tighten the base hooks, as this will deform the aluminum cover.
4. If the damaged picket had retaining sleeves mounted to it to hold the stringers in place, see instructions for realigning displaced stringers.

Realigning Displaced Stringers

A stringer may become displaced if a retaining sleeve's cement bond fails. This problem is often missed during inspection, but is easily repaired by applying a proper cement bond when replacing the sleeve.

1. Place the panel on an assembly rack.
   - If an assembly rack is not practical, an extra 20' PVC picket can be used as a guide. Stringer positions are marked along the picket from baseline measurements used in the construction of the assembly rack. The picket is then laid on top of the panel near the margin, with its end butted to the base cover, to guide the placement of stringers and retaining sleeves. Make one guide picket for the #1 panel configuration, and another for the #2 panel configuration. Bond the retaining sleeves to the picket wherever necessary.
2. Repair or replace broken pickets as necessary.
3. Align the stringers to their original configuration.
   - Use the marks on the assembly rack or guide picket.
4. Cement the retaining sleeves to the pickets.
   - Carefully follow the directions for PVC cement bonding given on page 19. Make sure the bonding surfaces get 100% coverage of the primer and cement.

- Check that the base cover is fixed securely inside the slot before cementing any of the sleeves into place.
- Refer to appendix D.3 for the correct position of retaining sleeves.
- When placing a pair of sleeves on either side of a stringer, leave 1/16" to 1/8" clearance between the sleeve and stringer as shown on page 25, Figure 24. This will prevent compression of the sleeves against the stringer when the picket is flexed.
- A sleeve may be reused where the bond has failed, as long as the surfaces are clean and well primed.

Repairing a Broken Stringer

Stringers rarely break, their failure is usually the result of a picket hole mistakenly drilled too close to one edge. Rather than dissembling the whole panel to replace the stringer, it can be spliced with spare stringer material.

1. Cut a spare stringer in half along its length.
    - The best way to do this without a table saw is to securely fasten the stringer flat, with screws or nails, onto a wooden plank or log. Then cut it lengthwise down the middle with a circular saw.
2. Place a 10 or 12 inch length of half stringer alongside the broken edge like a splint, and drill 3/16" holes through both pieces.
    - Drill holes in at least four places, with 2 on either side of the break.
    - Fasten the pieces together with #32 machine screws and nylon locking nuts.

LITERATURE CITED

Tobin, J.H. 1994. Construction and performance of a portable resistance board weir for counting migrating adult salmon in rivers. U.S. Fish and Wildlife Service, Kenai Fishery Resource Office, Alaska Fisheries Technical Report Number 22, Kenai, Alaska.

APPENDIX

APPENDIX A: LIST OF CONSTRUCTION MATERIALS

Description	Unit	Units per Panel	Units Required	Application
Steel flatstock, 1/8" x 1"	ft.	-	6	Pilothole template
Steel flatstock, 1/8" x 2"	ft.	-	16	Pilothole template
Steel flatstock, 1/8" x 2-1/2"	ft.	-	6	Pilothole template
Steel flatstock, 1/8" x 3"	ft.	-	10	Pilothole template
Dimensional lumber, 2" x 8" x 18'	ea.	-	4	Assembly rack
Dimensional lumber, 2" x 4" x 10'	ea.	-	4	Assembly rack
Saw horse kit, heavy duty, for 2" x 4" lumber	ea.	-	4	Assembly rack
UHMW Polyethylene mill plate, 1/2" x 4' x 10'	ea.	0.16		Stringers
PVC schedule 40 electrical conduit, 1" x 20'	ea.	A		Picket
PVC schedule 80 electrical conduit, 1-1/4" x 10'	ea.	0.7		Retaining sleeve
PVC socket cap, 1"	ea.	2a		Picket cap
PVC primer	qt.	0.1		Caps and sleeves
PVC cement, medium body, gray	qt.	0.15		Caps and sleeves
Aluminum square tube, 1" x 1/8" x 21'	ea.	0.25		Stringer support
Aluminum square tube, 2-1/2" x 1/8" x 21'	ea.	0.15		Base cover
Aluminum angle, 1-1/2" x 3/16"	ft.	0.25		Harness stay
Continuous hinge, 3" open face, #16 stainless	ft.	1		Resistance board hinge
AC Plywood, 3/4" x 4' x 8'	ea.	0.2		Resistance board
Paint, oil based enamel, gray	gal.	0.1		Resistance board
Eyebolt, bent wire, zink plated, 5/16" x 2-3/4"	ea.	2.2		Resistance board harness
Hex nut, stainless, nylon locking, 5/16"	ea.	2.2		Eyebolt
Fender washer, stainless, 5/16" x 1-1/4"	ea.	4.4		Eyebolt
Aircraft cable, stainless, 1/8", 7 x 19	ft.	22		Resistance board harness
Cable ferrule, copper button stop, 1/8"	ea.	8.8		Resistance board harness
Cable ferrule, copper sleeve, 1/8"	ea.	4.4		Resistance board harness
Thimble, stainless, to fit aircraft cable	ea.	2.2		Resistance board harness
Machine bolt, black, grade 1 or 2, 1/2" x 8"	ea.	2.2		Base hook
Steel flatstock, 1/8" x 1-1/4"	ft.	0.5		Base hook
Cut washer, black, 7/16"	ea.	2.2		Base hook
Hex nut, zinc, nylon locking, 1/2"	ea.	2.2		Base hook
Hex cap screw, stainless, 1/4" x 2-1/2"	ea.	5		Stringer support
Hex cap screw, stainless, 1/4" x 2"	ea.	10		Stringer support
Hex cap screw, stainless, 1/4" x 1-1/2"	ea.	10		Resistance board hinge
Hex nut, stainless, nylon locking, 1/4"	ea.	20		Hex cap screw
Cut washer, stainless, 1/4"	ea.	20		Hex cap screw
Fender washer, stainless, 1/4" x 1-1/4"	ea.	6.6		Hex cap screw
Hose clamp, all stainless, 1-1/4" #16	ea.	2		Connecting picket
PVC socket coupler, 1"	ea.	4		Picket repair
Wooden dowel rod, 1"	ft.	1		Picket repair

a) Units per panel depends on picket spacing. Add 1 for the connecting picket, then add 10%.

APPENDIX B: PLANS FOR 2-5/8" PICKET SPACING

Appendix B.1. Stringer Dimensions for 2-5/8" Picket Spacing

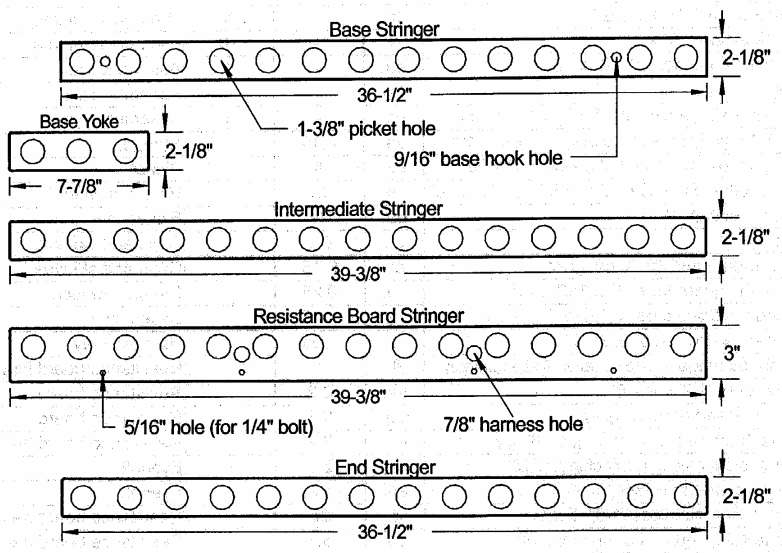

Appendix B. 2 Stringer Calculation Chart for Cutting UHMW Polyethylene Sheets

stringer	number of stringers per panel		total number of panels		total number of stringers		number of stringers per sheet		number of sheets to cut to stringer length	stringer length for 2-5/8" picket spacing
base	1	x	_____	=	_____	÷	21	=	_____	36-1/2"
intermediate	5	x	_____	=	_____	÷	21	=	_____	39-3/8"
resistance board	2	x	_____	=	_____	÷	15	=	_____	39-3/8"
end	1	x	_____	=	_____	÷	21	=	_____	36-1/2"

Appendix B.3. Base Stringer Pilothole Template Plan, 2-5/8" Picket Spacing

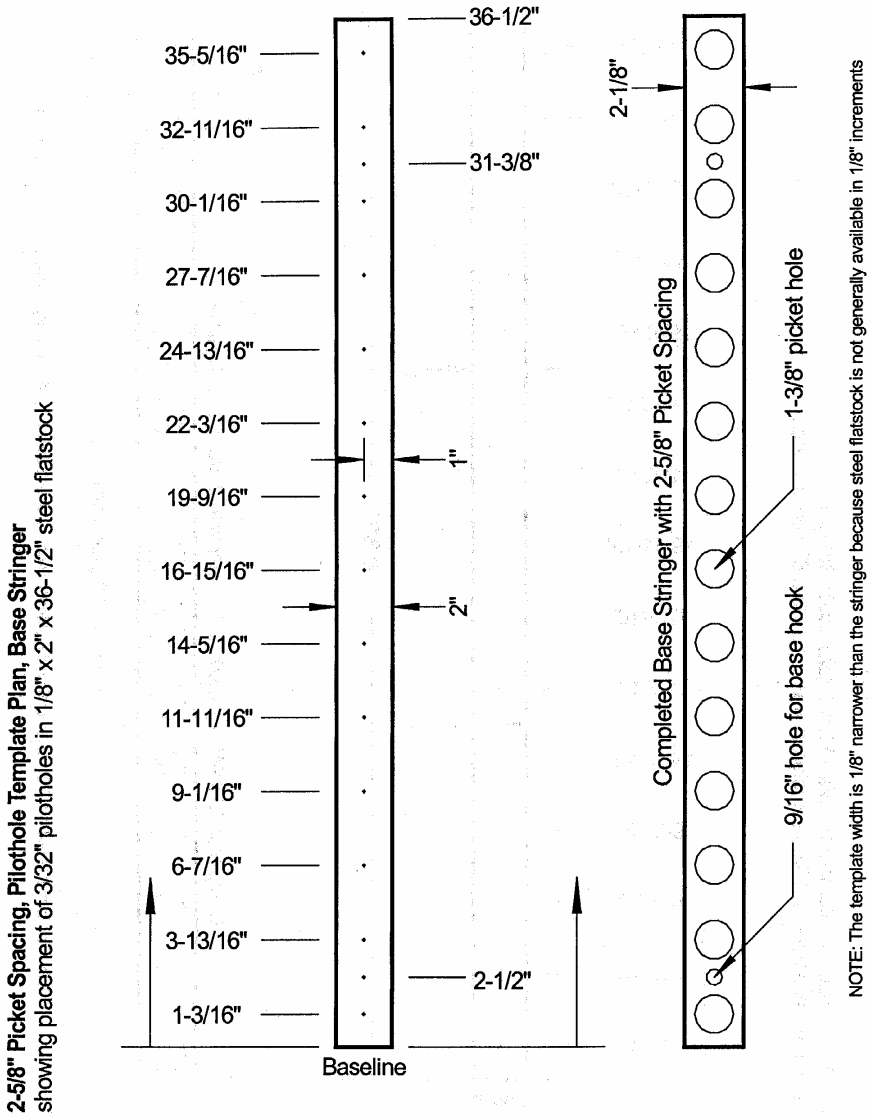

Appendix B.4. Intermediate Stringer Pilothole Template Plan, 2-5/8" Picket Spacing

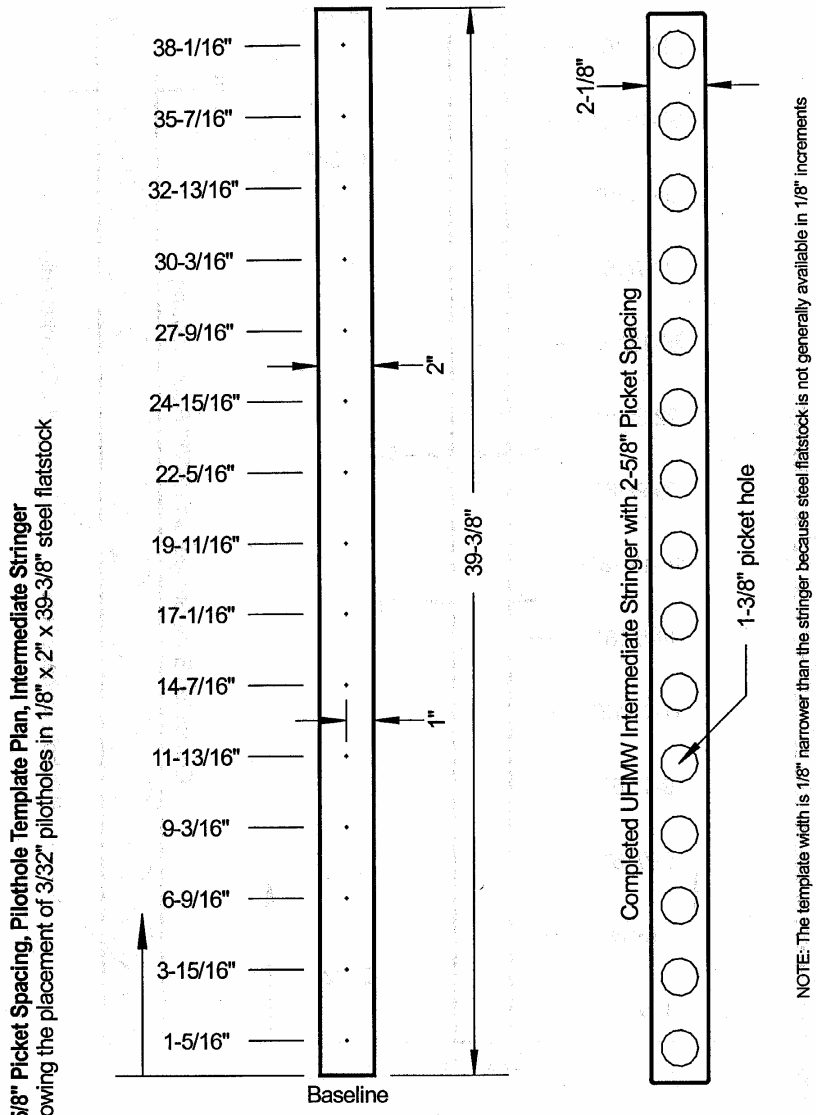

Appendix B.5. Resistance Board Stringer Pilothole Template Plan, 2-5/8" Picket Spacing

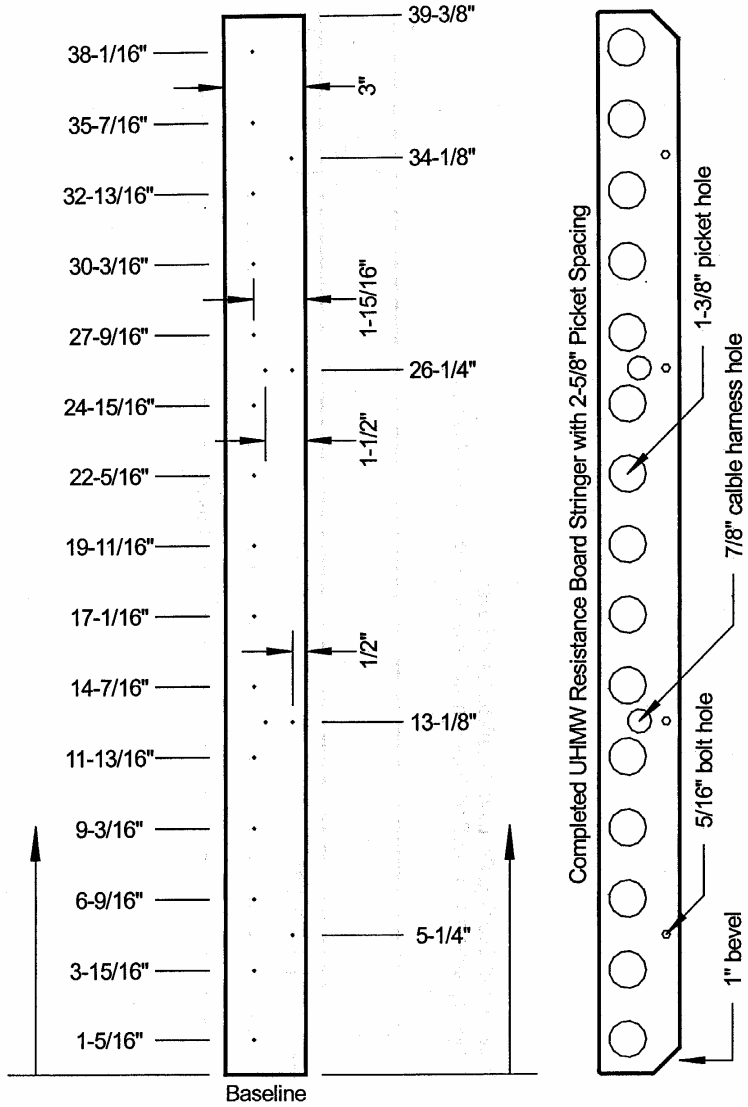

2-5/8" Picket Spacing, Pilothole Template Plan, Resistance Board Stringer
showing placement of 3/32" pilotholes in 1/8" x 3" x 39-3/8" steel flatstock

38

Appendix B.6. Base Cover Pilothole Template Plan, 2-5/8" Picket Spacing

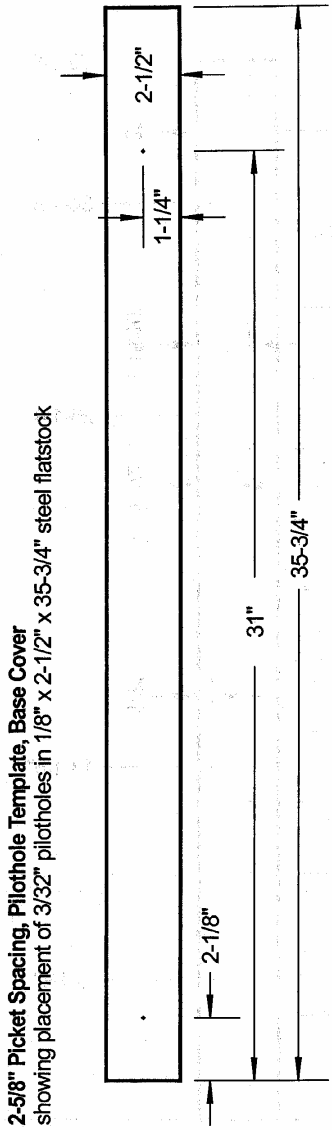

Appendix B.7. Resistance Board Stringer Support Pilothole Template Plan, 2-5/8" Picket Spacing

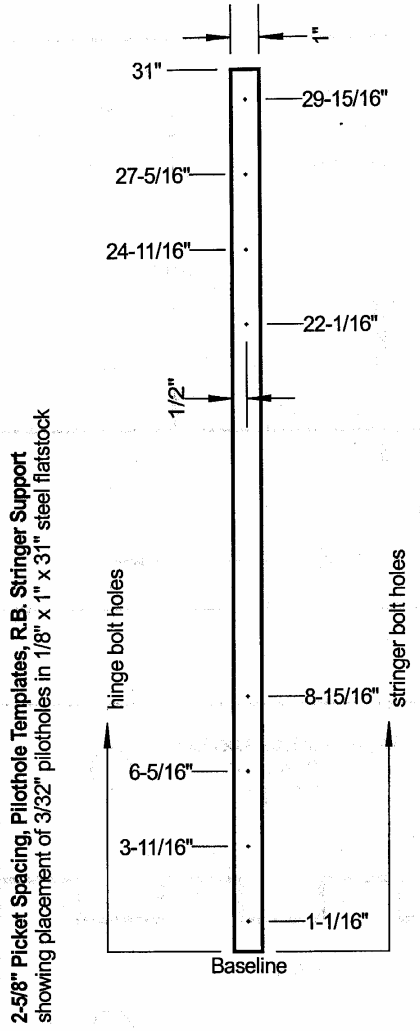

40

APPENDIX B.8. Resistance Board Hinge Pilothole Template Plan, 2-5/8" Picket Spacing (showing placement of 3/32" pilotholes in 1/8" x 3" x 4-3/8" steel flatstock)

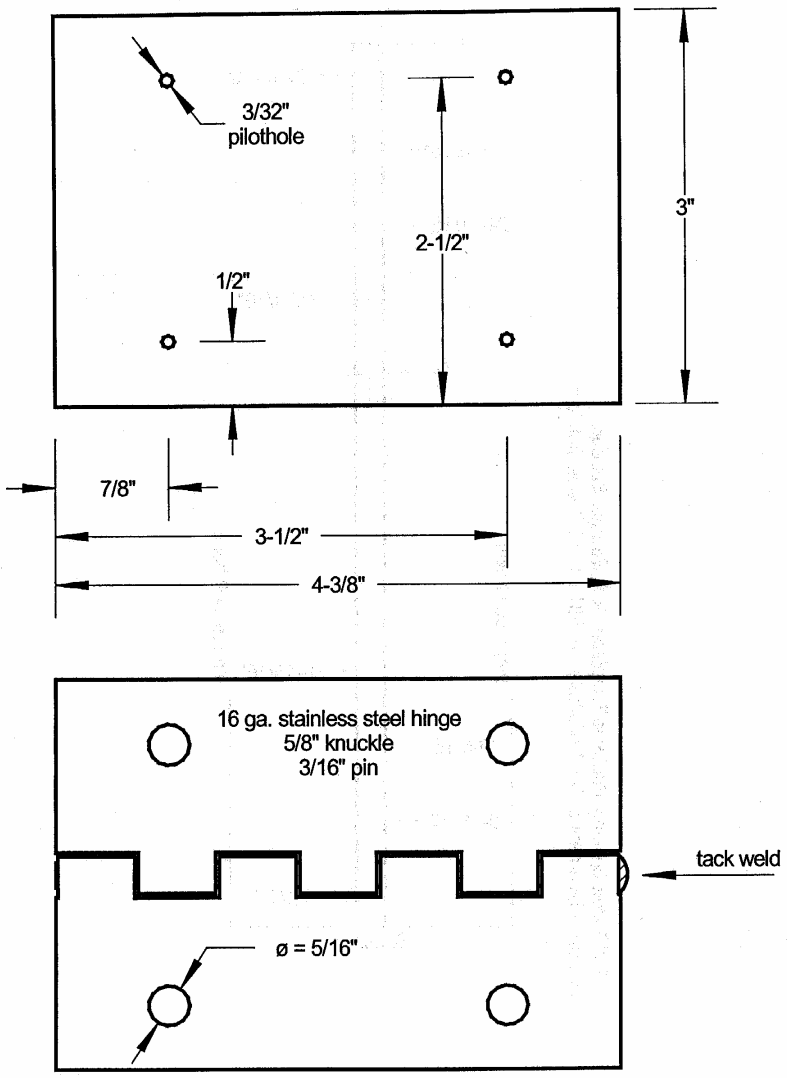

41

Appendix B.9. Resistance Board Bolt Hole Placement, 2-5/8" Picket Spacing

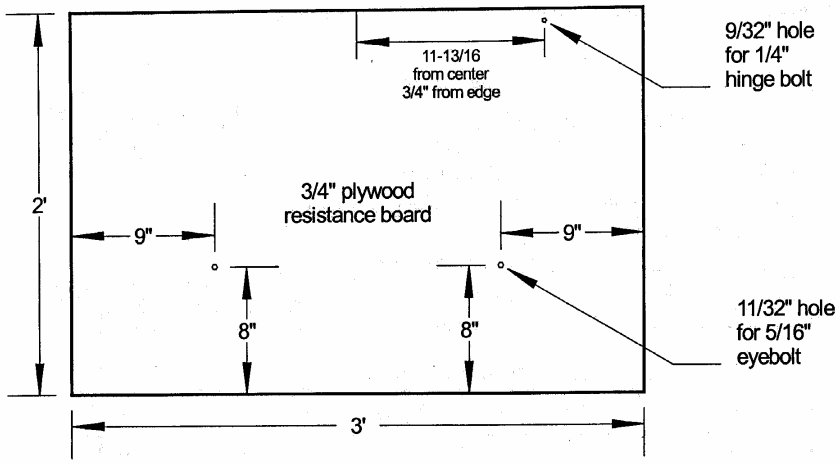

APPENDIX C: PLANS FOR 3" PICKET SPACING

Appendix C.1. Stringer Dimensions for 3" Picket Spacing

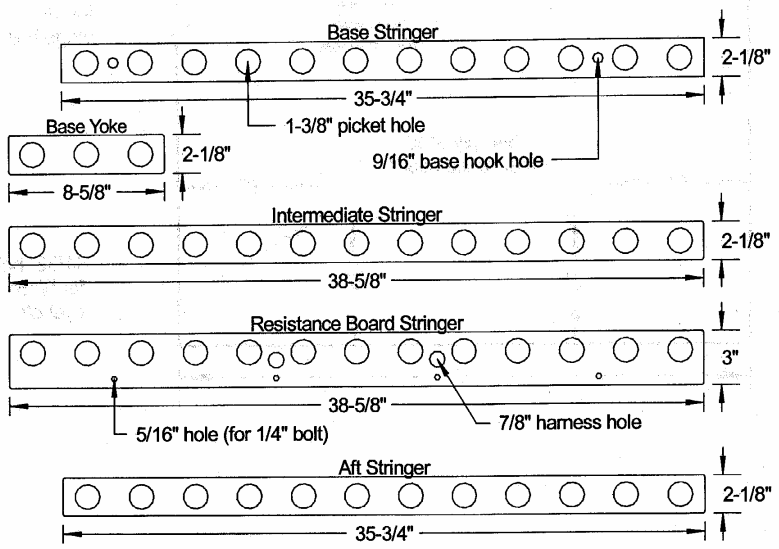

Appendix C.2. Stringer Calculation Chart for Cutting UHMW Polyethylene Plastic Sheets

stringer	number of stringers per panel		total number of panels		total number of stringers		number of stringers per sheet		number of sheets to cut to stringer length	stringer length for 3" picket spacing
base	1	x	_____	=	_____	÷	21	=	_____	35-3/4"
intermediate	5	x	_____	=	_____	÷	21	=	_____	38-5/8"
resistance board	2	x	_____	=	_____	÷	15	=	_____	38-5/8"
end	1	x	_____	=	_____	÷	21	=	_____	35-3/4"

Appendix C.3. Base Stringer Pilothole Template Plan, 3" Picket Spacing

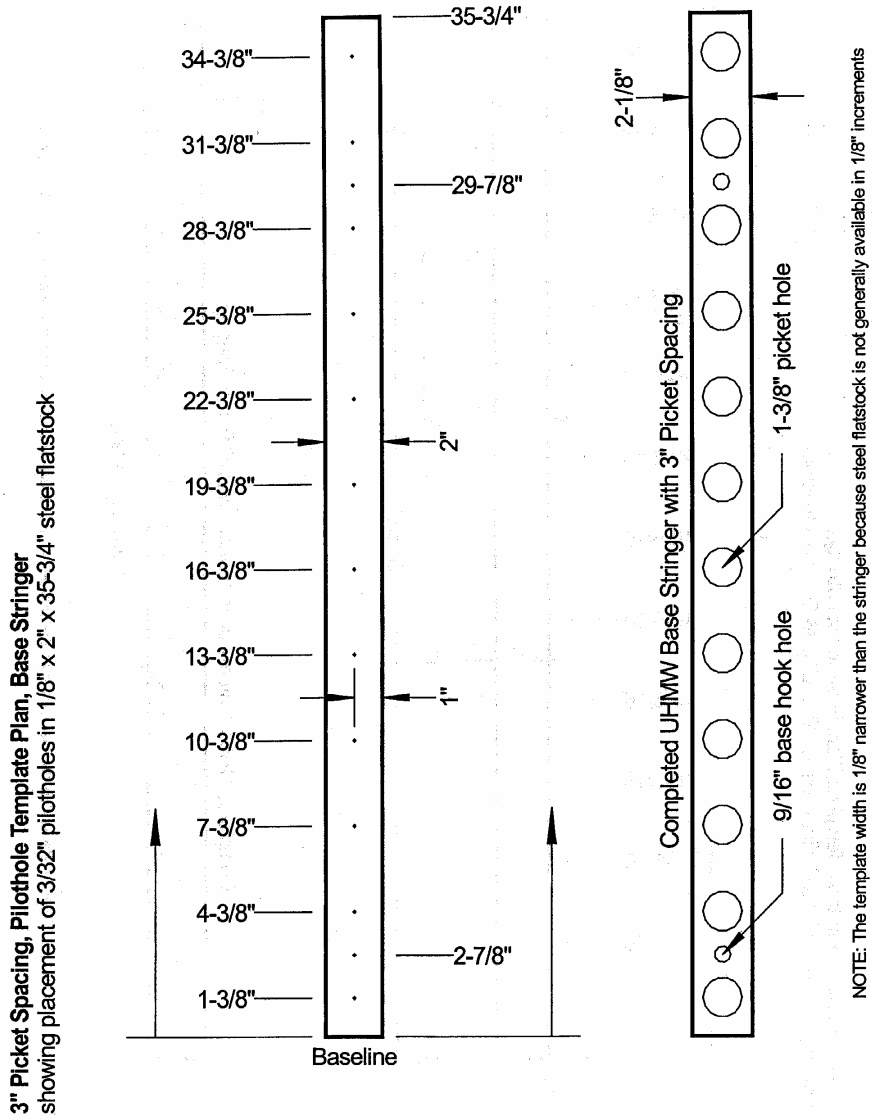

Appendix C.4. Intermediate Stringer Pilothole Template Plan, 3" Picket Spacing

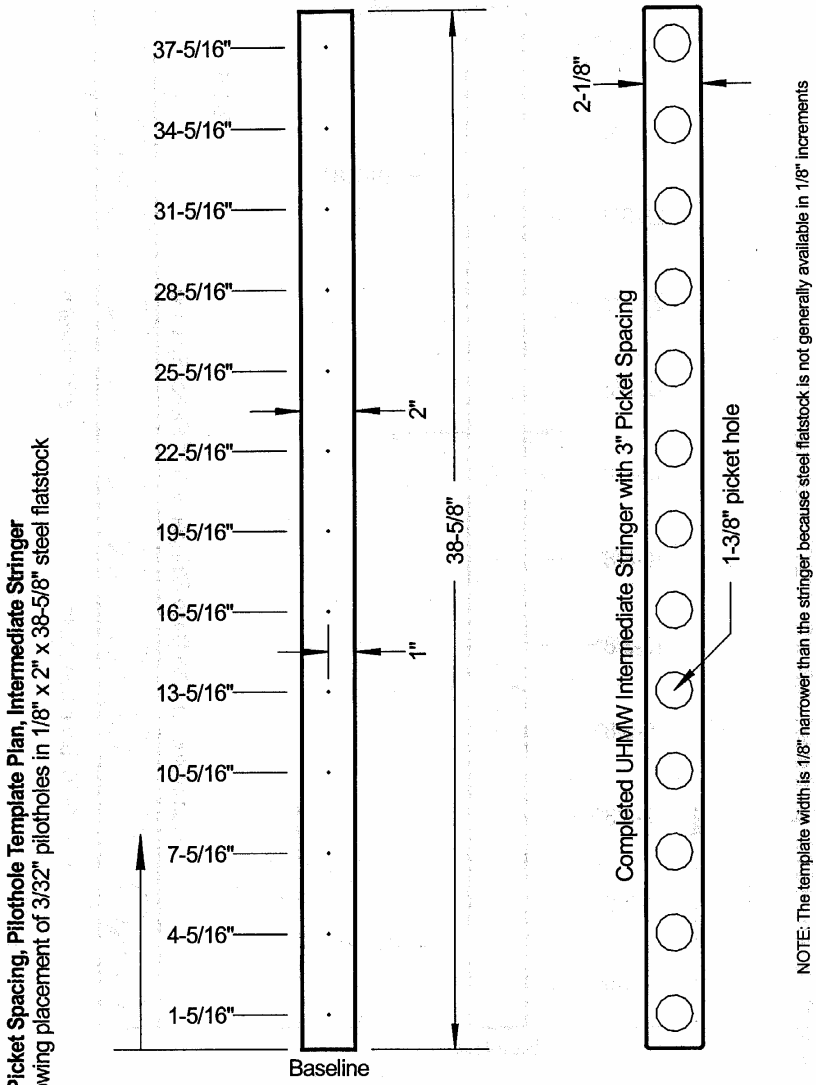

Appendix C.5. Resistance Board Stringer Pilothole Template Plan, 3" Picket Spacing

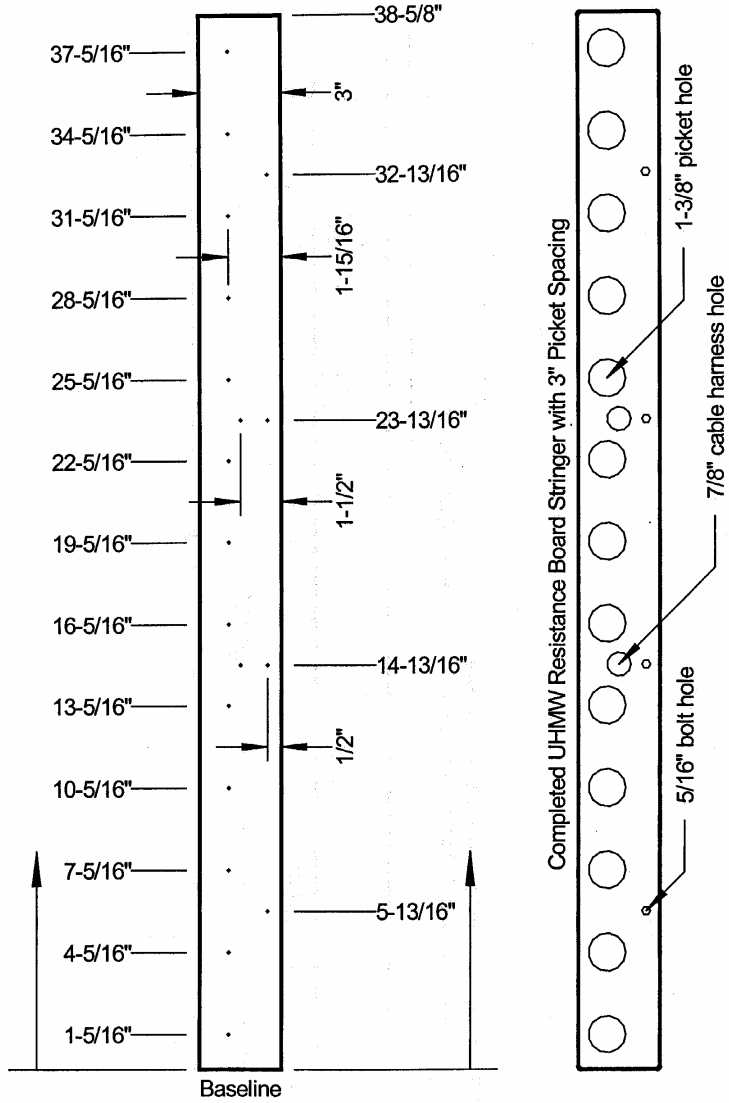

Appendix C.6. Base Cover Pilothole Template Plan, 3" Picket Spacing

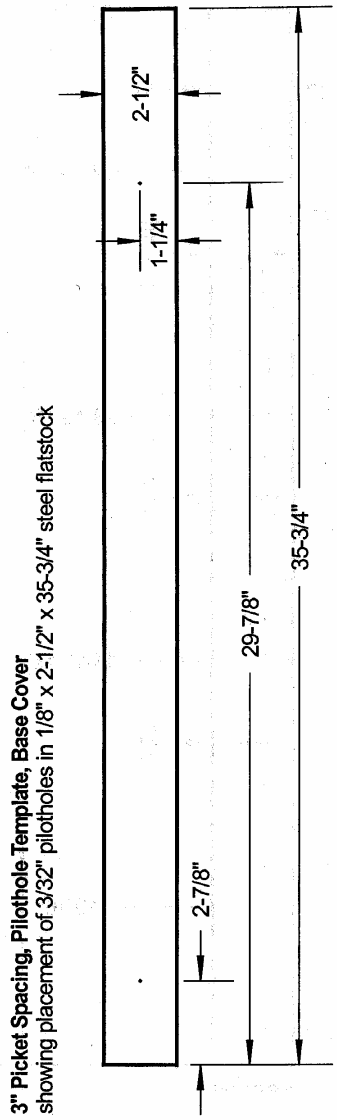

3" Picket Spacing, Pilothole Template, Base Cover
showing placement of 3/32" pilotholes in 1/8" x 2-1/2" x 35-3/4" steel flatstock

47

Appendix C.7. Resistance Board Stringer Support Pilothole Template Plan, 3" Picket Spacing

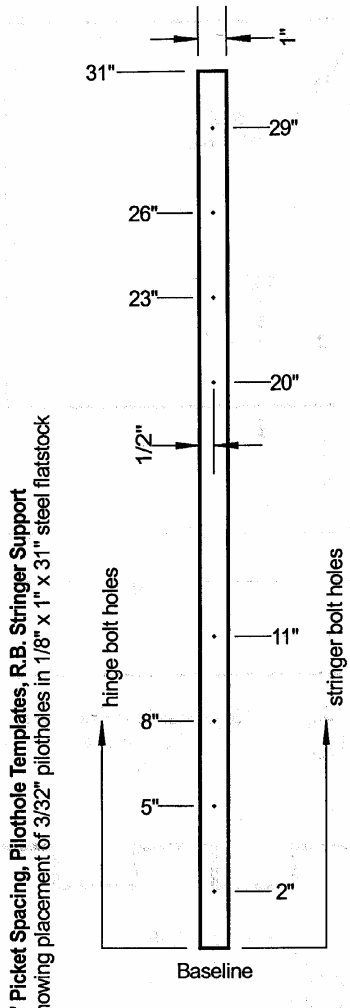

3" Picket Spacing, Pilothole Templates, R.B. Stringer Support
showing placement of 3/32" pilotholes in 1/8" x 1" x 31" steel flatstock

48

Appendix C.8. Resistance Board Hinge Pilothole Template Plan, 3" Picket Spacing (showing placement of 3/32" pilotholes in 1/8" x 3" x 5" steel flatstock)

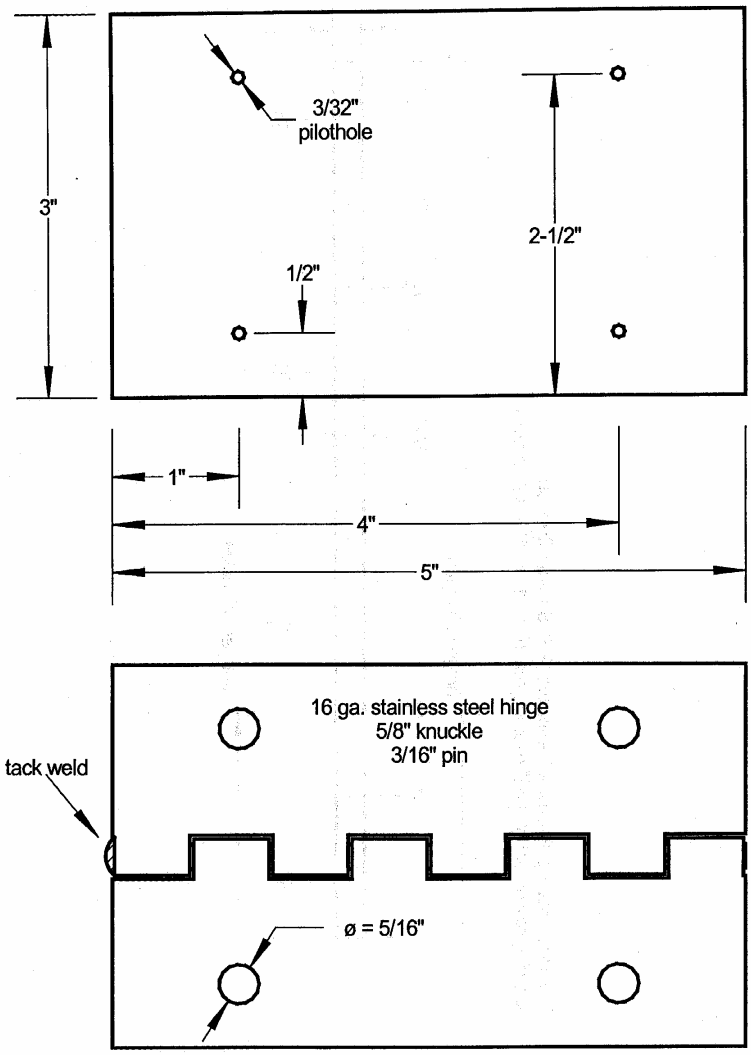

Appendix C.9. Resistance Board Bolt Hole Placement Plan, 3" Picket Spacing

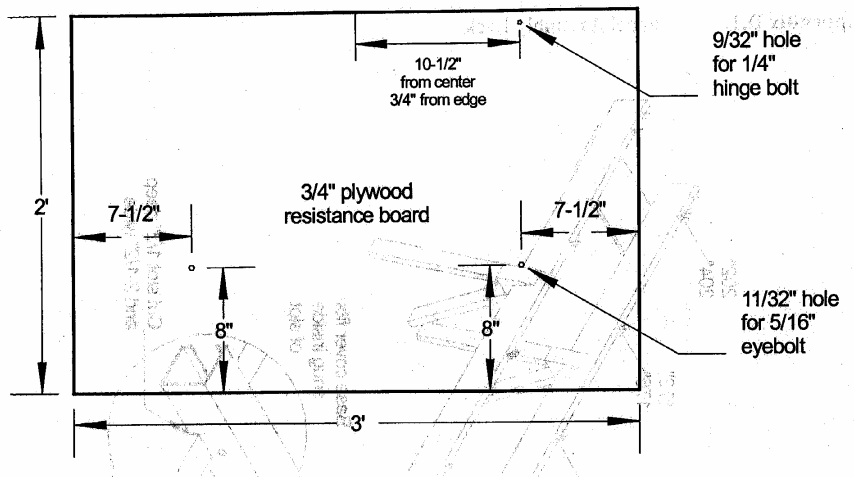

APPENDIX D: PANEL ASSEMBLY

Appendix D.1. Panel Assembly Rack

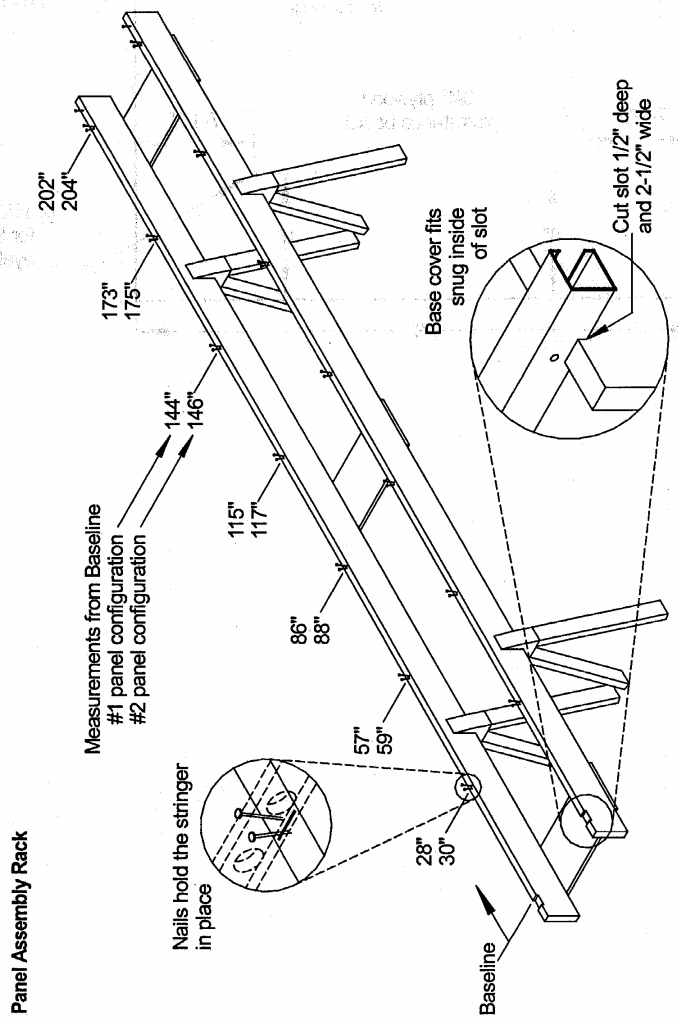

Appendix D.2. Orientation of Pickets and Stringers with Panel on the Assembly Rack (as seen from the base of the rack)

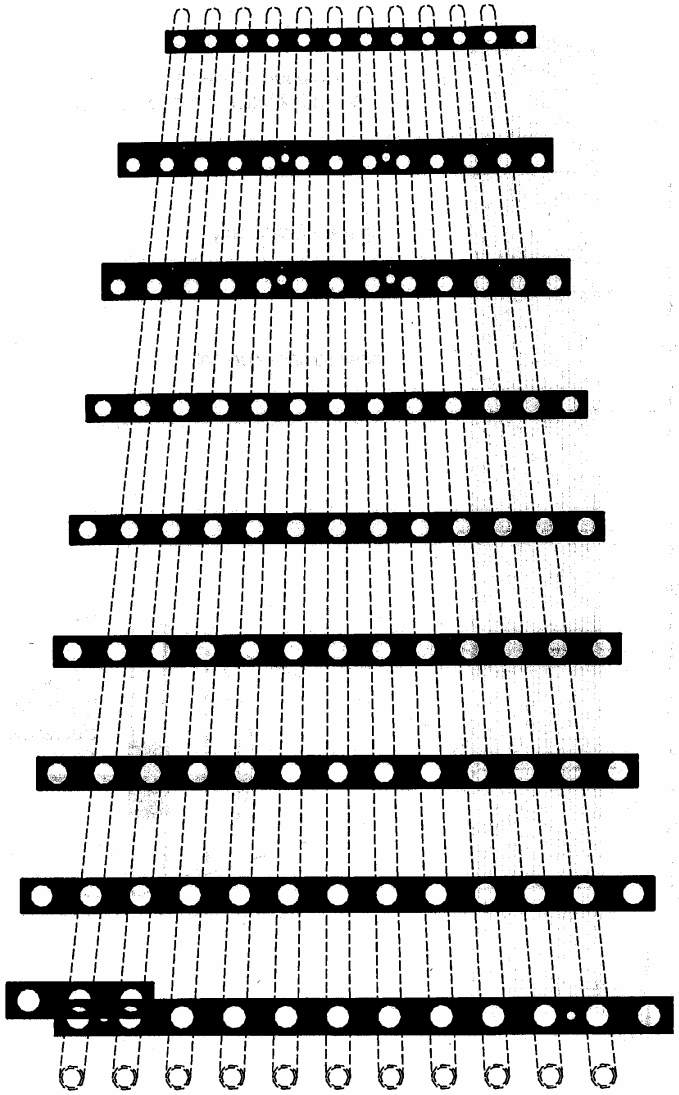

52

Appendix D.3. Retaining Sleeve Placement

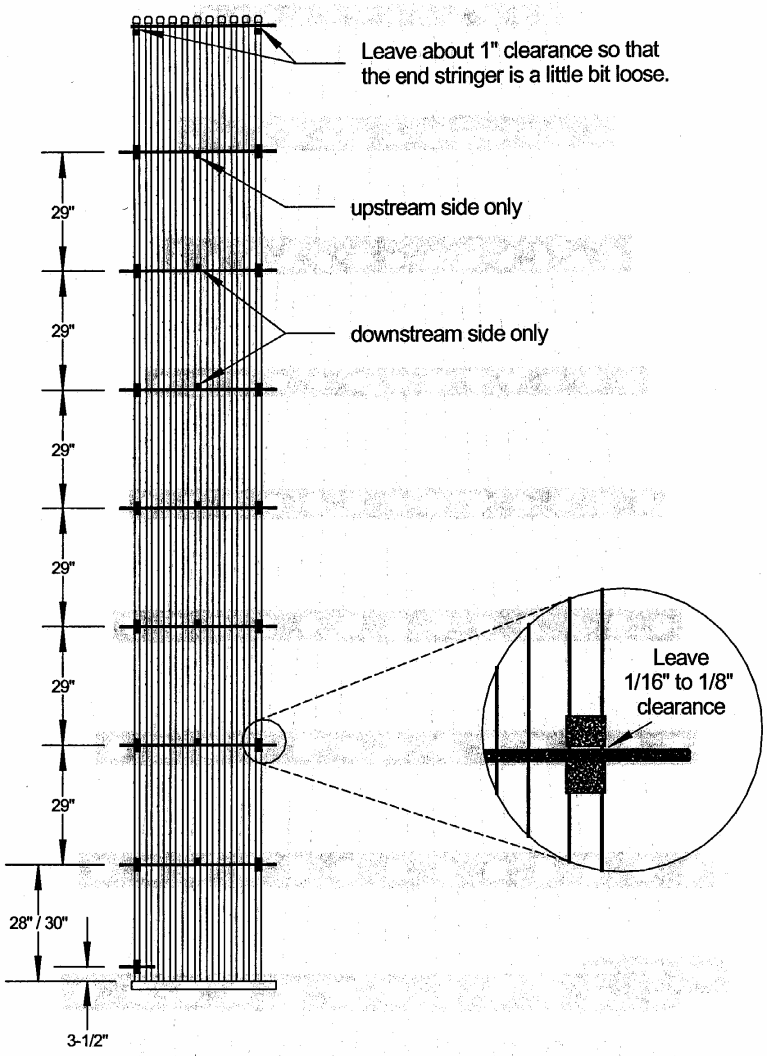

Appendix D.4. Exploded Diagram of Resistance Board Harness Bearing Stringer Assembly

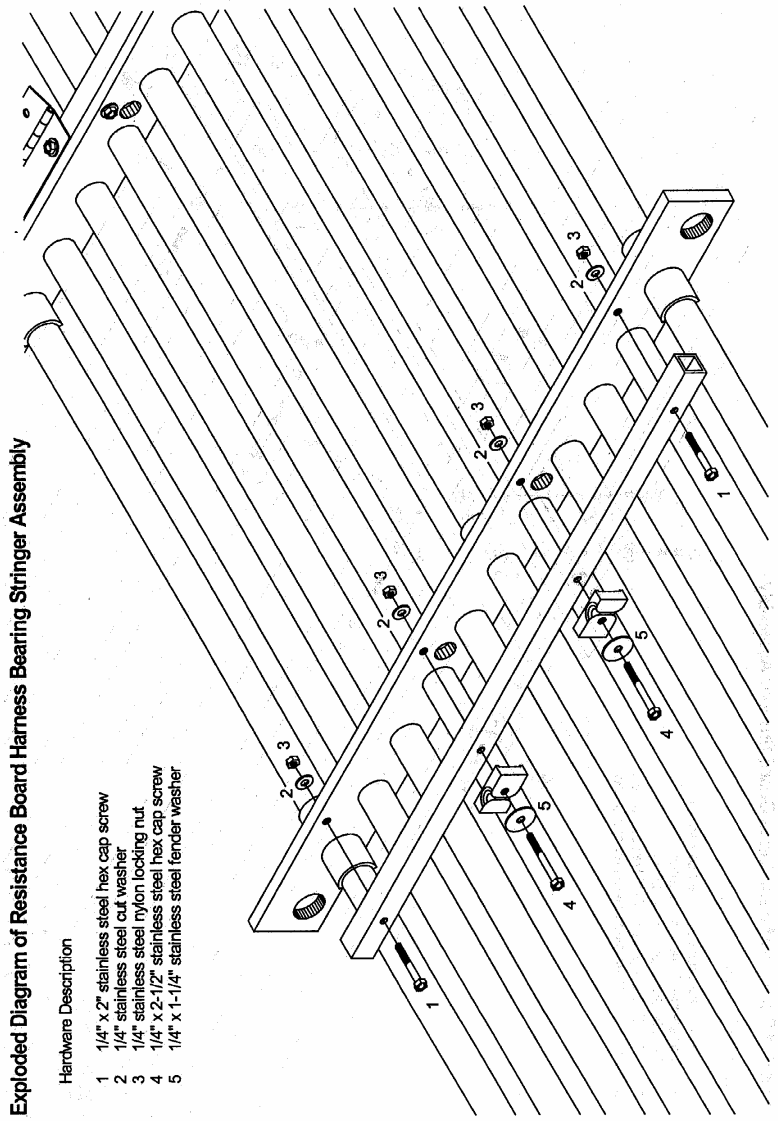

54

Appendix D.5. Exploded Diagram of Resistance Board Stringer Assembly

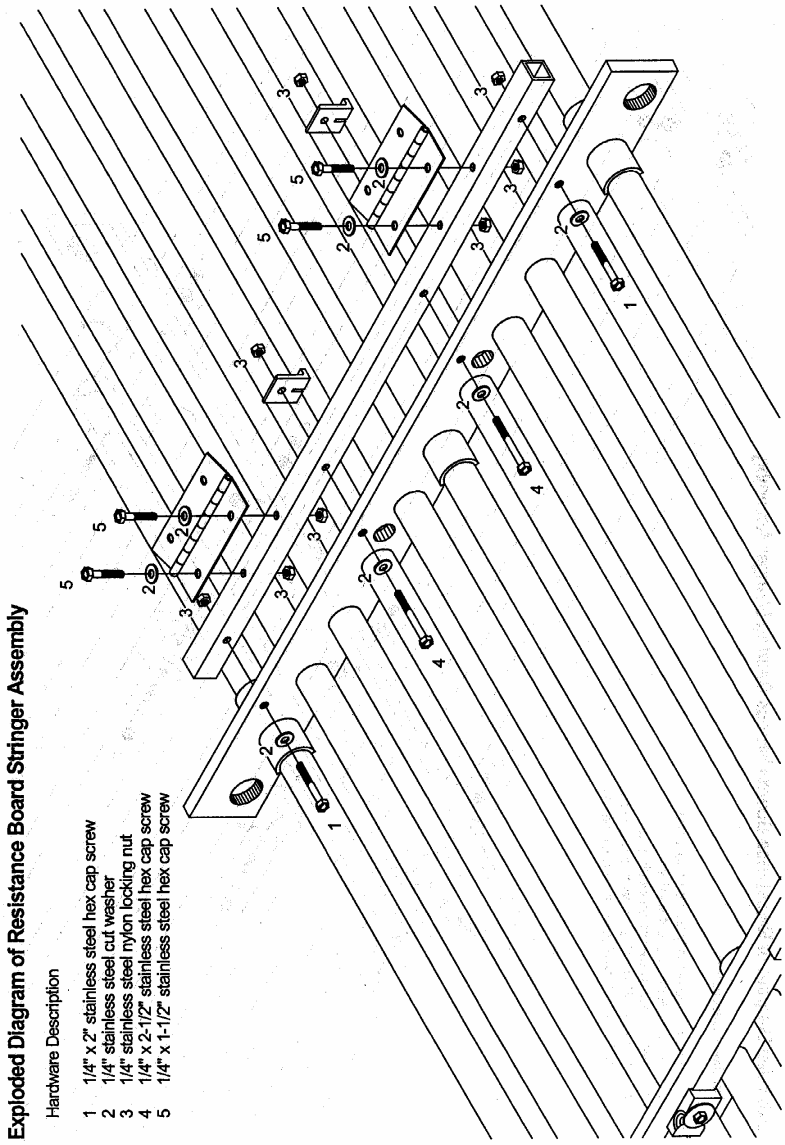

55

Appendix D.5. Exploded Diagram of Resistance Board Stringer Assembly

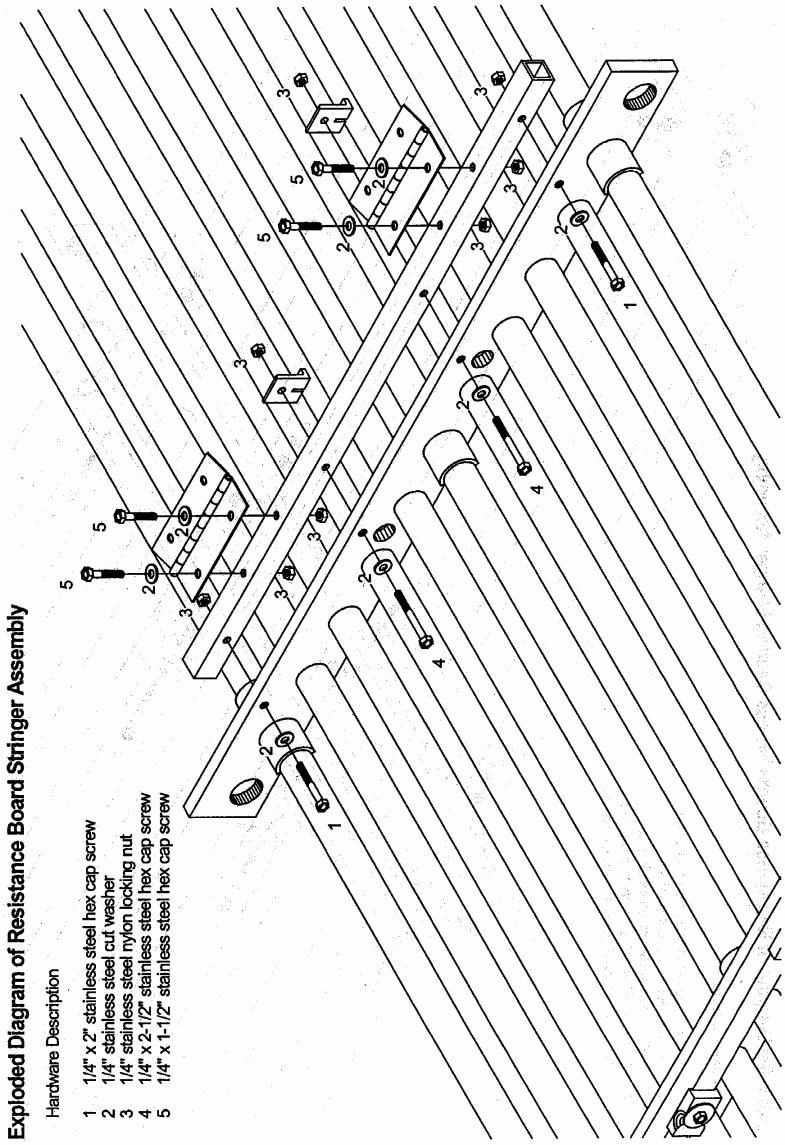

55